Polo Estate 1998 ➤

4 and 5 speed manual gearbox 020/02K									
Gearbox ID	AUG	CHC	CJF	CYZ	DDG	DDR	DFN	DFW	DGG
	DGH	DGK	DGT	DXY	DGF				

Edition 01.1998

Protected by copyright. Copying for private or commercial purposes, in part or in whole, is not permitted unless authorised by Volkswagen AG. Volkswagen AG does not guarantee or accept any liability with respect to the correctness of information in this document. Copyright by Volkswagen AG.

satelettronica

List of Workshop Manual Repair GroupsList of Workshop Manual Repair GroupsList of Workshop Manual Repair Groups

Polo Estate 1998 ➤

4 and 5 speed manual gearbox 020/02K

Protected by copyright. Copying for private or commercial purposes, in part or in whole, is not permitted unless authorised by Volkswagen AG. Volkswagen AG does not guarantee or accept any liability with respect to the correctness of information in this document. Copyright by Volkswagen AG.

Repair Group

00 - Technical data
30 - Clutch
34 - Controls, Housing
35 - Gears, Shafts
39 - Final drive, Differential

satelettronica

Technical information should always be available to the foremen and mechanics, because their careful and constant adherence to the instructions is essential to ensure vehicle road-worthiness and safety. In addition, the normal basic safety precautions for working on motor vehicles must, as a matter of course, be observed.

All rights reserved.
No reproduction without prior agreement from publisher.

Copyright © 2011 Volkswagen AG, Wolfsburg

00056406020

Contents

00 - Technical data . . . 1

1 Gearbox identification . . . 1
1.1 Gearbox identification . . . 1
1.2 Code letters, assembly allocation, ratios, capacities . . . 2

2 Calculating overall ratio "i" . . . 5
2.1 Calculating overall ratio "i" . . . 5

3 Transmission layout . . . 6
3.1 Transmission layout . . . 6

4 General repair instructions . . . 8
4.1 General repair instructions . . . 8

30 - Clutch . . . 10

1 Servicing clutch control . . . 10
1.1 Servicing clutch control . . . 10
1.2 Assembly overview - Pedal cluster mechanical clutch control . . . 12
1.3 Removing and installing over-centre spring . . . 15
1.4 Removing and installing clutch pedal . . . 17
1.5 Assembly overview - Mechanics . . . 19
1.6 Checking function of clutch cable . . . 22
1.7 Removing and installing clutch cable . . . 24
1.8 Assembly overview - Pedal cluster for hydraulically operated clutch . . . 27
1.9 Removing and installing clutch pedal . . . 31
1.10 Assembly overview - Hydraulic system . . . 34
1.11 Removing and installing master cylinder . . . 38
1.12 Bleeding clutch system . . . 41

2 Servicing clutch . . . 42
2.1 Servicing clutch . . . 42
2.2 Removing and installing clutch . . . 45

34 - Controls, Housing . . . 48

1 Servicing gear selector mechanism . . . 48
1.1 Servicing gear selector mechanism . . . 48
1.2 Installation position of gear selector mechanism . . . 48
1.3 Assembly overview - Gearstick housing/gearstick . . . 50
1.4 Installing gear stick gaiter to gear stick knob . . . 57
1.5 Assembly overview - gear selector relay points at gearbox . . . 58
1.6 Removing and installing gearstick/selector rod . . . 63
1.7 Adjusting gear selector mechanism . . . 65

2 Servicing gearbox housing cover . . . 69
2.1 Servicing gearbox housing cover . . . 69

3 Removing and installing gearbox . . . 75
3.1 Removing and installing gearbox . . . 75

4 Dismantling and assembling gearbox . . . 92
4.1 Dismantling and assembling gearbox . . . 92
4.2 Overview . . . 92
4.3 Assembly overview . . . 94
4.4 Removing and installing gearbox housing cover and 5th gear . . . 95
4.5 Removing and installing gearbox housing and selector mechanism . . . 98
4.6 Removing and installing input shaft, output shaft (pinion shaft), differential and selector forks . . . 101
4.7 Dismantling and assembling sequence . . . 107

5 Servicing gearbox housing and selector shaft . . . 127
5.1 Servicing gearbox housing and selector shaft . . . 127

Protected by copyright. Copyright by Volkswagen AG. Commercial use or distribution of this document is not permitted without the authorisation by Volkswagen AG. Volkswagen AG does not guarantee or accept any liability with respect to the correctness of information in this document. Copyright by Volkswagen AG. Protected by copyright. Copying, in whole or in part, is not permitted without the authorisation by Volkswagen AG. Volkswagen AG does not guarantee or accept any liability with respect to the correctness of information in this document. Copyright by Volkswagen AG.
satelettronica

6 Checking gearbox oil 133
6.1 Checking gearbox oil 133
7 Servicing clutch housing 134
7.1 Servicing clutch housing 134

35 - Gears, Shafts 143
1 Dismantling and assembling input shaft 143
1.1 Dismantling and assembling input shaft 143
2 Dismantling and assembling output shaft 156
2.1 Dismantling and assembling output shaft 156
2.2 Allocating output shafts 169
3 Adjusting output shaft 170
3.1 Adjusting output shaft 170

39 - Final drive, Differential 174
1 Removing and installing drive flange oil seal 174
1.1 Removing and installing drive flange oil seal 174
2 Dismantling and assembling differential 177
2.1 Dismantling and assembling differential 177
3 Adjusting differential 190
3.1 Adjusting differential 190
4 Adjustment overview 193
4.1 Adjustment overview 193

Protected by copyright. Copying for private or commercial purposes, in part or in whole, is not permitted unless authorised by Volkswagen AG. Volkswagen AG does not guarantee or accept any liability with respect to the correctness of information in this document. Copyright by Volkswagen AG.
satelettronica

00 - Technical data

1 - Gearbox identification

1.1 - Gearbox identification

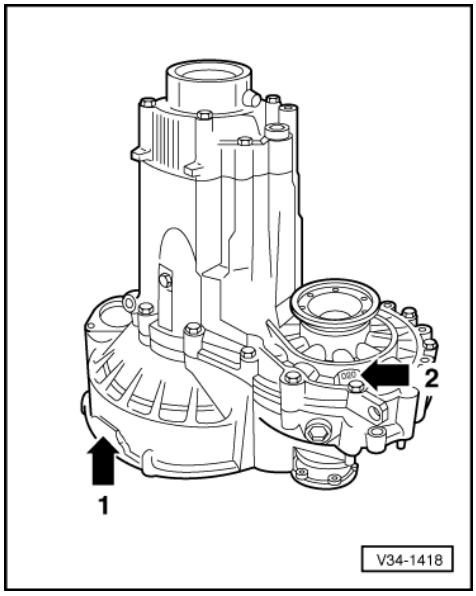

In the Caddy 1996 ä, Polo Classic 1996 ä and Polo Estate 1998 ä the 4 and 5 speed manual gearbox 020/02K is installed in combination with the 4 Cyl. engine.

Allocation =>Page 2 .

-> Location on gearbox

Code letters and date of manufacture (arrow 1)

Manual gearbox 020 or 02K (arrow 2)

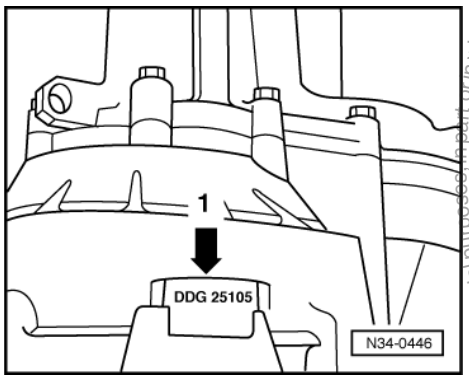

-> Code letters and date of manufacture of gearbox (arrow 1)

Example:	DDG	25	10	5
	I	I	I	I
	I	I	I	I

satelettronica
Protected by copyright. Copying for private or commercial purposes, in part or in whole, is not permitted unless authorised by Volkswagen AG. Volkswagen AG does not guarantee or accept any liability with respect to the correctness of information in this document. Copyright by Volkswagen AG.

Example:	DDG	25	10	5
	Code letters	Day	Month	Year (1995) of manufacture

Additional data depends on manufacture.

Note:

The gearbox code letters are also shown on the vehicle identification plates.

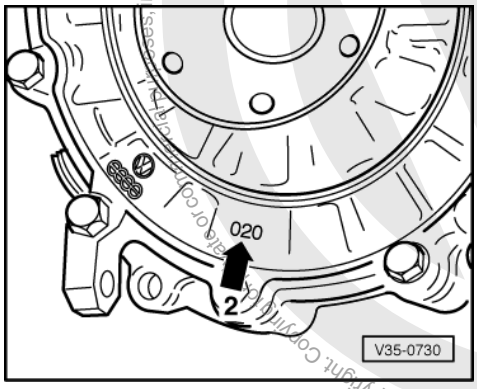

-> Manual gearbox 020 or 02K (arrow 2)

1.2 - Code letters, assembly allocation, ratios, capacities

Manual gearbox		4 and 5 speed 020 / 02K		
Engine code		AUG1)	CHC	CJF
Manufactured	from to	10.95 05.96	10.95 05.96	10.95 05.96
Allocation	Model	Polo Classic 1996 ä	Polo Classic 1996 ä	Polo Classic 1996 ä
	Engine	1.6 ltr. - 74 kW	1.9 ltr. - 47 kW Diesel	1.6 ltr. - 74 kW
Ratio: Z2 : Z1	Final drive	66 : 18 = 3.667	66 : 18 = 3.667	67 : 17 = 3.941
	1st gear	38 : 11 = 3.455	38 : 11 = 3.455	38 : 11 = 3.455
	2nd gear	35 : 18 = 1.944	35 : 18 = 1.944	35 : 18 = 1.944
	3rd gear	39 : 27 = 1.444	36 : 28 = 1.286	37 : 27 = 1.370
	4th gear	35 : 31 = 1.129	30 : 33 = 0.909	32 : 31 = 1.032
	5th gear	42 : 47 = 0.894	38 : 51 = 0.745	34 : 40 = 0.850
	6th gear	-	-	-
	Reverse gear	38 : 12 = 3.167	38 : 12 = 3.167	38 : 12 = 3.167
	Speedometer drive	15 : 7 = 2.143	15 : 7 = 2.143	15 : 7 = 2.143

Engine code	AUG	CHC	CJF
Capacity	1.9 Litres		
Specification	Gear oil G50 SAE 75W90 (synthetic oil)		
Clutch control	Mechanical	Mechanical	Mechanical
Clutch plate ø	200 mm	200 mm	200 mm
Drive shaft flange diameter	100 mm	90 mm	90 mm

Protected by copyright. Copying for private or commercial purposes, in part or in whole, is not permitted unless authorised by Volkswagen AG. Volkswagen AG does not guarantee or accept any liability with respect to the correctness of information in this document. Copyright by Volkswagen AG.
satelettronica

Engine code	AUG	CHC	CJF
iOverall ratio in top gear	3.278	2.732	3.350

1) France

2) Manual gearbox 02K

Differences to manual gearbox 020: Drillings in clutch housing for securing to all engines.

Manual gearbox		4 and 5 speed 020 / 02K		
Engine code		CYZ	DDG	DDR 1)
Manufactured	from to	10.95 05.96	10.95 05.96	07.96
Allocation	Model	Caddy 1996 ä	Caddy 1996 ä	Caddy 1996 ä
	Engine	1.9 ltr. - 47 kW Diesel	1.6 ltr. - 55 kW	1.7 ltr. - 42 kW Diesel
Ratio: Z2 : Z1	Final drive	67 : 17 = 3.941	68 : 16 = 4.250	68 : 16 = 4.250
	1st gear	38 : 11 = 3.455	38 : 11 = 3.455	38 : 11 = 3.455
	2nd gear	35 : 18 = 1.944	35 : 18 = 1.944	35 : 18 = 1.944
	3rd gear	36 : 28 = 1.286	37 : 27 = 1.370	36 : 28 = 1.286
	4th gear	31 : 33 = 0.939	32 : 31 = 1.032	31 : 33 = 0.939
	5th gear	38 : 51 = 0.745	34 : 40 = 0.850	38 : 51 = 0.745
	6th gear	-	-	-
	Reverse gear	38 : 12 = 3.167	38 : 12 = 3.167	38 : 12 = 3.167
	Speedometer drive	15 : 7 = 2.143	15 : 7 = 2.143	15 : 7 = 2.143

Engine code	CYZ	DDG	DDR
Capacity	1.9 Litres		
Specification	Gear oil G50 SAE 75W90 (synthetic oil)		
Clutch control	Mechanical	Mechanical	Mechanical
Clutch plate ø	200 mm	200 mm	200 mm
Drive shaft flange ø	90 mm	90 mm	90 mm
iOverall ratio in top gear	2.936	3.613	3.166

From 05.96 modified selector shaft, so that reverse gear can be engaged without having to wait.

1) France

Manual gearbox		4 and 5 speed 020 / 02K		
Engine code		DFN	DFW	DGG 1)
Manufactured	from to	05.96 09.97	05.96	05.96 01.98
Allocation	Model	Polo Classic 1996 ä	Polo Classic 1996 ä Polo Estate 1998 ä	Polo Classic 1996 ä Polo Estate 1998 ä
	Engine	1.6 ltr. - 55 kW	1.9 ltr. - 47 kW Diesel	1.6 ltr. - 74 kW
Ratio: Z2 : Z1	Final drive	66 : 18 = 3.667	66 : 18 = 3.667	67 : 17 = 3.941
	1st gear	38 : 11 = 3.455	38 : 11 = 3.455	38 : 11 = 3.455
	2nd gear	35 : 18 = 1.944	35 : 18 = 1.944	35 : 18 = 1.944
	3rd gear	37 : 27 = 1.370	36 : 28 = 1.286	37 : 27 = 1.370
	4th gear	32 : 31 = 1.032	30 : 33 = 0.909	32 : 31 = 1.032
	5th gear	34 : 40 = 0.850	38 : 51 = 0.745	34 : 40 = 0.850
	6th gear	-	-	-

Protected by copyright. Copying for private or commercial purposes, in part or in whole, is not permitted unless authorised by Volkswagen AG. Volkswagen AG does not guarantee or accept any liability with respect to the correctness of information in this document. Copyright by Volkswagen AG
satelettronica

	Reverse gear	38 : 12 = 3.167	38 : 12 = 3.167	38 : 12 = 3.167
	Speedometer drive	15 : 7 = 2.143	15 : 7 = 2.143	15 : 7 = 2.143

Engine code	DFN	DFW	DGG
Capacity	1.9 Litres		
Specification	Gear oil G50 SAE 75W90 (synthetic oil)		
Clutch control	Mechanical	Mechanical	Mechanical
Clutch plate ø	190 mm	200 mm	200 mm
Drive shaft flange ø	100 mm	90 mm	90 mm
iOverall ratio in top gear	3.117	2.732	3.350

From 05.96 modified selector shaft, so that reverse gear can be engaged without having to wait.

1) Manual gearbox 02K

Differences to manual gearbox 020: Drillings in clutch housing for securing to all engines.

Manual gearbox		4 and 5 speed 020 / 02K		
Engine code		DGH 1)	DGK 1)	DGT 2)
Manufactured	from to	05.96	01.97 01.98	05.96
Allocation	Model	Caddy 1996 ä Polo Classic 1996 ä Polo Estate 1998 ä	Caddy 1996 ä	Caddy 1996 ä Polo Classic 1996 ä Polo Estate 1998 ä
	Engine	1.7 ltr. - 42 kW Diesel 1.9 ltr. - 47 kW Diesel	1.6 ltr. - 55 kW	1.6 ltr. - 55 kW 1.6 ltr. - 74 kW
Ratio: Z2 : Z1	Final drive	67 : 17 = 3.941	68 : 16 = 4.250	66 : 18 = 3.667
	1st gear	38 : 11 = 3.455	38 : 11 = 3.455	38 : 11 = 3.455
	2nd gear	35 : 18 = 1.944	35 : 18 = 1.944	35 : 18 = 1.944
	3rd gear	36 : 28 = 1.286	37 : 27 = 1.370	39 : 27 = 1.444
	4th gear	31 : 33 = 0.939	32 : 31 = 1.032	35 : 31 = 1.129
	5th gear	38 : 51 = 0.745	34 : 40 = 0.850	42 : 47 = 0.894
	6th gear	-	-	-
	Reverse gear	38 : 12 = 3.167	38 : 12 = 3.167	38 : 12 = 3.167
	Speedometer drive	15 : 7 = 2.143	15 : 7 = 2.143	15 : 7 = 2.143

Engine code	DGH	DGK	DGT
Capacity	1.9 Litres		
Specification	Gear oil G50 SAE 75W90 (synthetic oil)		
Clutch control	Mechanical	Mechanical	Mechanical
Clutch plate ø	200 mm	190 mm	190 mm 3)
Drive shaft flange ø	90 mm	90 mm	100 mm

satelettronica

Engine code	DGH	DGK	DGT
iOverall ratio in top gear	2.396	3.613	3.278

From 05.96 modified selector shaft, so that reverse gear can be engaged without having to wait.

1) Manual gearbox 02K

Differences to manual gearbox 020: Drillings in clutch housing for securing to all engines.

2) France

3) 1.6 ltr. - 74 kW = 200 mmø

Manual gearbox		4 and 5 speed 020 / 02K		
Engine code		DXY 1)	DGF 1)	
Manufactured	from to	11.97	01.99	
Allocation	Model	Polo Classic 1996 ä Polo Estate 1998 ä	Polo Classic 1996 ä Polo Estate 1998 ä	
	Engine	1.7 ltr. - 42 kW Diesel	1.6 ltr. - 74 kW	
Ratio: Z2 : Z1	Final drive	67 : 17 = 3.941	67 : 17 = 3.941	
	1st gear	38 : 11 = 3.455	38 : 11 = 3.455	
	2nd gear	35 : 18 = 1.944	35 : 18 = 1.944	
	3rd gear	36 : 28 = 1.286	37 : 27 = 1.370	
	4th gear	31 : 33 = 0.939	32 : 31 = 1.032	
	5th gear	38 : 51 = 0.745	34 : 40 = 0.850	
	6th gear	-	-	-
	Reverse gear	38 : 12 = 3.167	38 : 12 = 3.167	
	Speedometer drive	15 : 7 = 2.143	15 : 7 = 2.143	

Engine code	DXY	DGF	
Capacity	1.9 Litres		
Specification	Gear oil G50 SAE 75W90 (synthetic oil)		
Clutch control	hydraulic	mechanical	
Clutch plate ø	200 mm	190 mm	
Drive shaft flange ø	90 mm	100 mm	
iOverall ratio in top gear	2.396	3.350	

1) Manual gearbox 02K

Differences to manual gearbox 020: Drillings in clutch housing for securing to all engines.

2 - Calculating overall ratio "i"

2.1 - Calculating overall ratio "i"

Example:

	5th gear	Final drive
Drive gear	ZG1 = 40	ZA1 = 16

Protected by copyright. Copying for private or commercial purposes, in part or in whole, is not permitted unless authorised by Volkswagen AG. Volkswagen AG does not guarantee or accept any liability with respect to the correctness of information in this document. Copyright by Volkswagen AG.
satelettronica

	5th gear	Final drive
Driven gear	ZG2 = 34	ZA2 = 68

i= Z2/ Z1 1)

iG = gear ratio = ZG2: ZG1 = 34 : 40 = 0.850

iA = axle ratio = ZA2 : ZA1 = 68 : 16 = 4.250

iOV = overall ratio
= ig x ia = 0.850 x 4.250 = 3.613

1) Z1 = No. of teeth driving gear, Z2 = No. of teeth driven gear

3 - Transmission layout

3.1 - Transmission layout

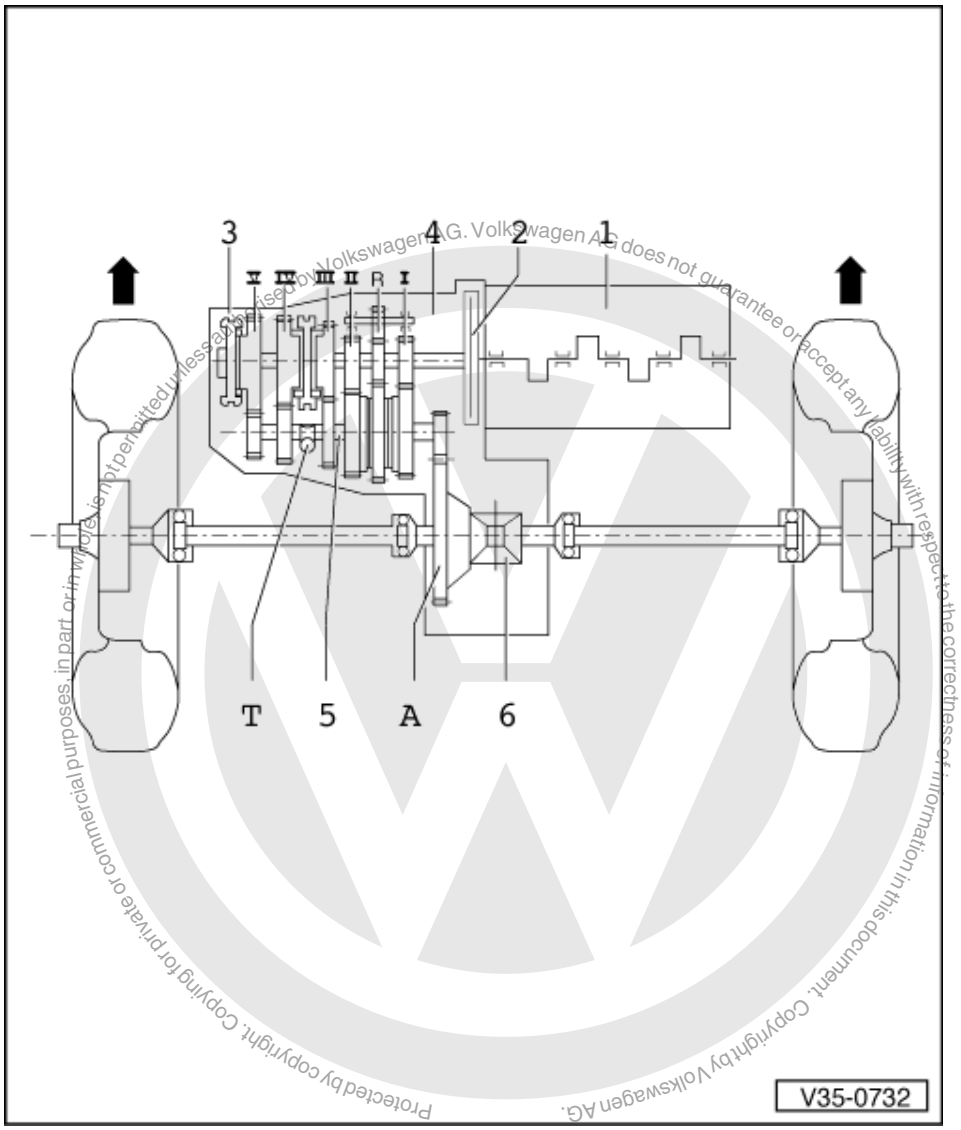

Protected by copyright. Copying for private or commercial purposes, in part or in whole, is not permitted unless authorised by Volkswagen AG. Volkswagen AG does not guarantee or accept any liability with respect to the correctness of information in this document. Copyright by Volkswagen AG.

satelettronica

Designation

1 Engine
2 Clutch
3 Gearbox
4 Input shaft
5 Output shaft/pinion shaft
6 Differential

Arrows point in direction of travel

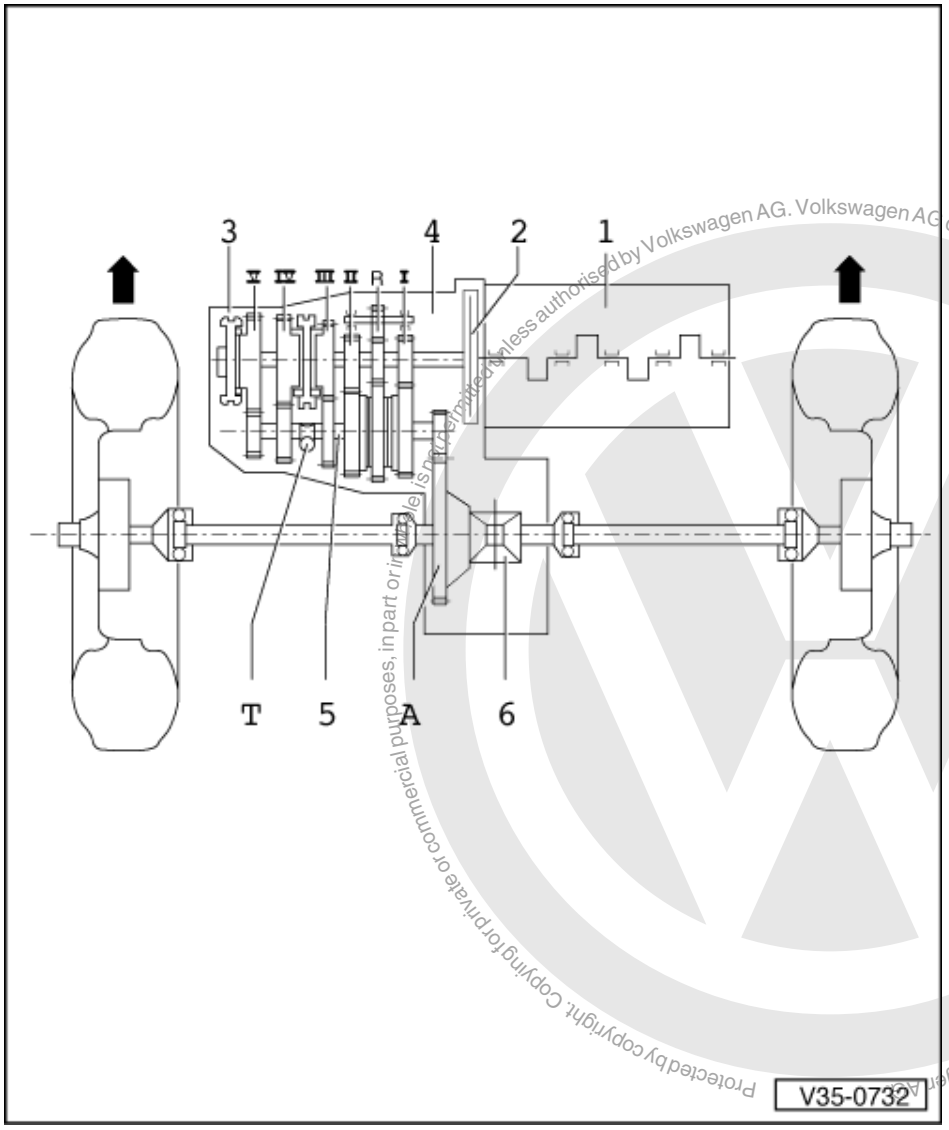

Protected by copyright. Copying for private or commercial purposes, in part or in whole is not permitted unless authorised by Volkswagen AG. Volkswagen AG does not guarantee or accept any liability with respect to the correctness of information in this document. Copyright by Volkswagen AG.
satelettronica

Gear ratios

I	- 1st gear
II	- 2nd gear
III	- 3rd gear
IV	- 4th gear
V	- 5th gear
R	- Reverse gear
A	- Final drive

T - Speedometer drive

Arrows point in direction of travel

4 - General repair instructions

4.1 - General repair instructions

To ensure perfect and successful gearbox repairs, the greatest care and cleanliness as well as the use of good and proper tools is essential. Obviously, the basis rules for safety are also applicable during repair work.

A number of generally valid instructions applicable for the various repair procedures - which were previously repeated a number of times at numerous places in the Workshop Manual - are summarized here. They apply to this Workshop Manual.

Gearbox

- When installing ensure that the dowel sleeves between the engine and gearbox are correctly located.
- When changing a gearbox fill with gear oil to the lower edge of the filler hole.
- Capacities and specifications => from Page 2 .

Gaskets, sealing rings

Gearboxes with paper gaskets:

- Renew paper gaskets.

Gearboxes with sealant:

- Thoroughly clean joint surfaces and apply sealant AMV 188 200 03 evenly, not too thick .
- Renew "O-rings".
- Radial shaft oil seals.

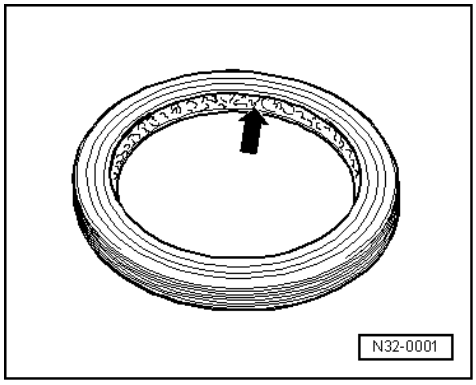

Before installing:

-> Lightly oil outer edge, fill space between sealing lips (arrow) with grease.

After installation:

Check gearbox oil; if necessary top-up to lower edge of oil filler hole, specification =>from Page 2 .

Locking devices

- Renew circlips.
- Do not overstretch circlips.

Protected by copyright. Copying for private or commercial purposes, in part or in whole, is not permitted unless authorised by Volkswagen AG. Volkswagen AG does not guarantee or accept any liability with respect to the correctness of information in this document. Copyright by Volkswagen AG.
satelettronica

- Circlips must locate properly in the groove.

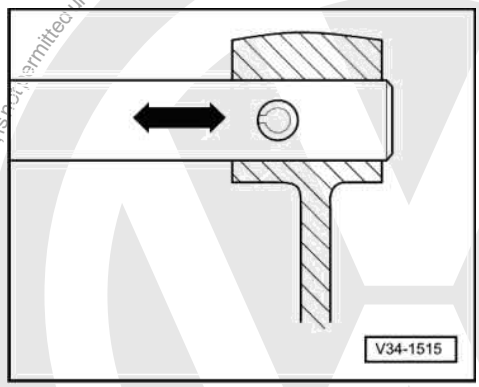

- -> Renew spring pins
  Installation position: Slot longitudinal to line of force.

Bolts and nuts

- Tighten and loosen bolts and nuts for securing covers and housings in a diagonal sequence.
- Especially delicate parts, such as clutch pressure plates, must not be distorted. Loosen and tighten bolts and nuts in stages in a diagonal sequence.
- Tightening torques as specified are for unoiled bolts and nuts.
- Renew self-locking bolts and nuts.

Bearings

- Install needle bearings with lettered side (thicker metal) towards fitting tool.
- Lubricate all gearbox bearings with gear oil.
- Taper roller bearings fitted to one shaft must be renewed as a set. Use same make of bearings if possible!
- Heat inner taper roller bearing races to approx. 100 °C before pressing on.
- Do not interchange outer or inner races of bearings of the same size. The bearings are matched in pairs.

Shims

- Measure shims at several points with a micrometer. Tolerance variations make it possible to find the exact shim thickness required.
- Check for burrs and damage.
- Only install perfect shims.

Synchronizer rings

- Do not interchange. When reusing always fit to the same gear.
- Check for wear and renew if necessary.
- Coat with gear oil before installing.

Gear wheels

- Before installing clean and heat on a hot plate to approx. 100 °C.
- Temperature can be checked with temperature tester V.A.G 1558.

Protected by copyright. Copyright by Volkswagen AG. Volkswagen AG does not guarantee or accept any liability with respect to the correctness of information in this document. Copyright by Volkswagen AG. Reproduction for commercial purposes, in part or in whole, is not permitted unless authorised by Volkswagen AG.
satelettronica

30 - Clutch

1 - Servicing clutch control

1.1 - Servicing clutch control

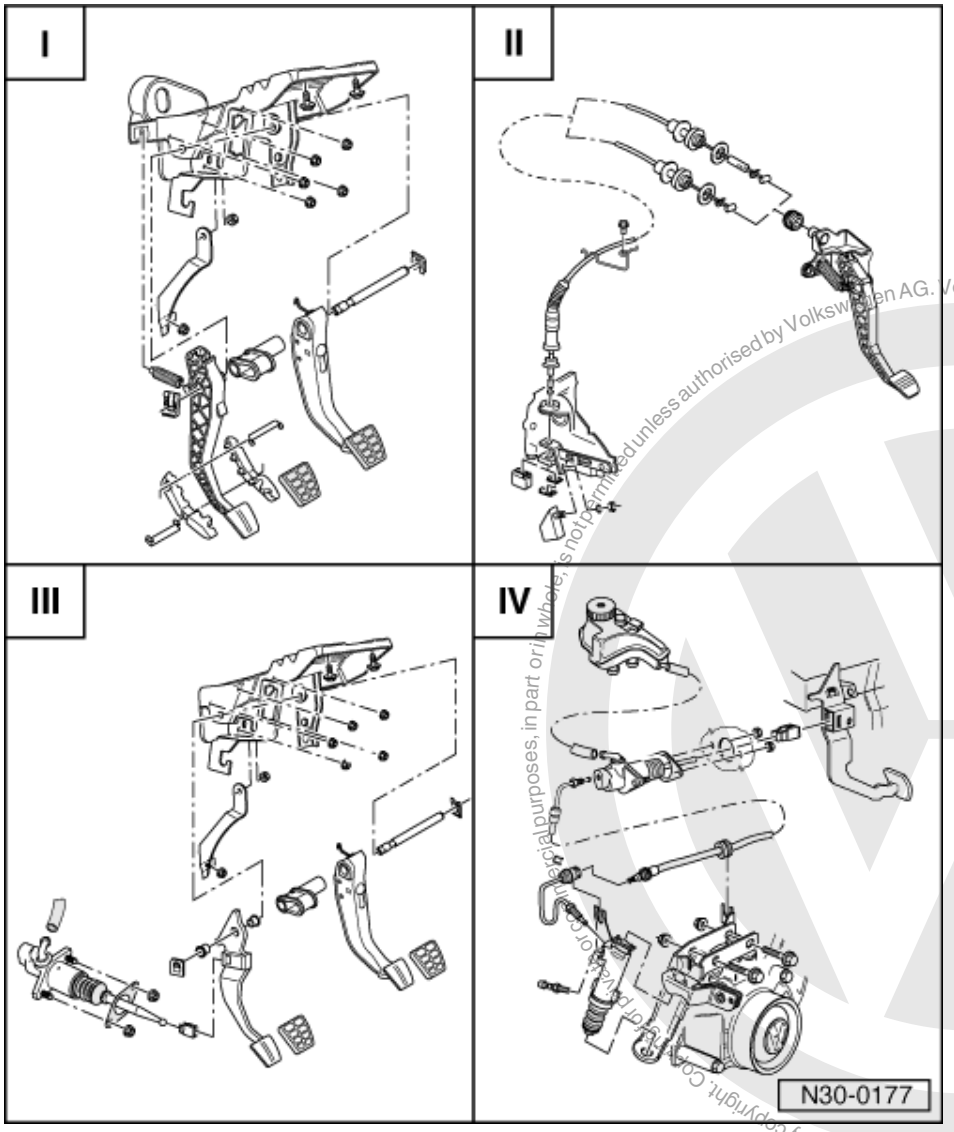

I - Assembly overview - pedal cluster mechanical clutch control
=>Page 12

II - Assembly overview - mechanics
=>Page 19

III - Assembly overview - pedal cluster hydraulic clutch control
=>Page 27

IV - Assembly overview - hydraulics
=>Page 34

Notes:

- Disconnect battery earth strap.

Protected by copyright. Copyright by Volkswagen AG. Volkswagen AG does not guarantee or accept any liability with respect to the correctness of information in this document. Copyright by Volkswagen AG.
satelettronica

- For vehicles with coded radio obtain radio code.

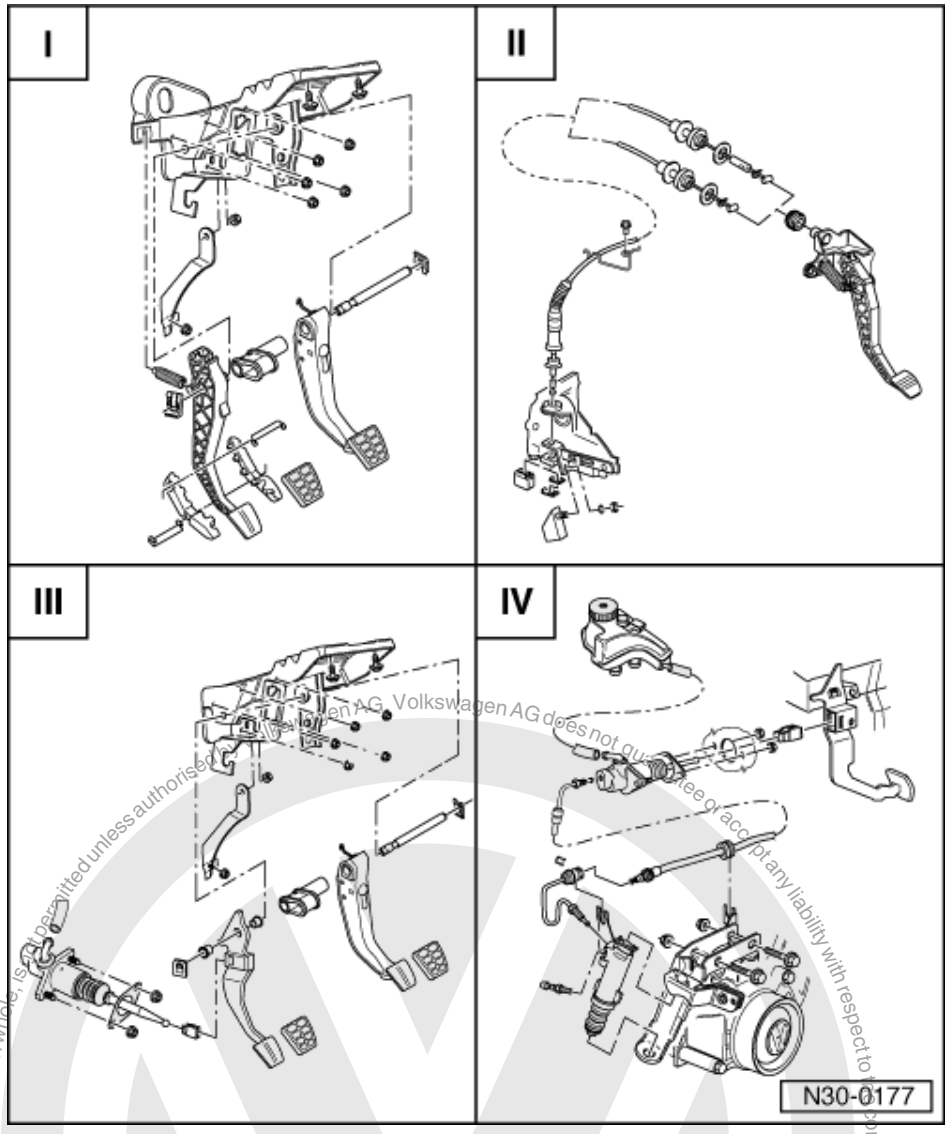

- Lubricate all bearings and contact surfaces with poly resin grease part No. G 052 142 A2.
- Before working on pedal cluster remove left storage shelf.

=> Repair group 70; Dash panel; Removing dash panel Dash panel Removing dash panel

Protected by copyright. Copying for private or commercial purposes, in part or in whole, is not permitted unless authorised by Volkswagen AG. Volkswagen AG does not guarantee or accept any liability with respect to the correctness of information in this document. Copyright by Volkswagen AG.
satelettronica

1.2 - Assembly overview - Pedal cluster mechanical clutch control

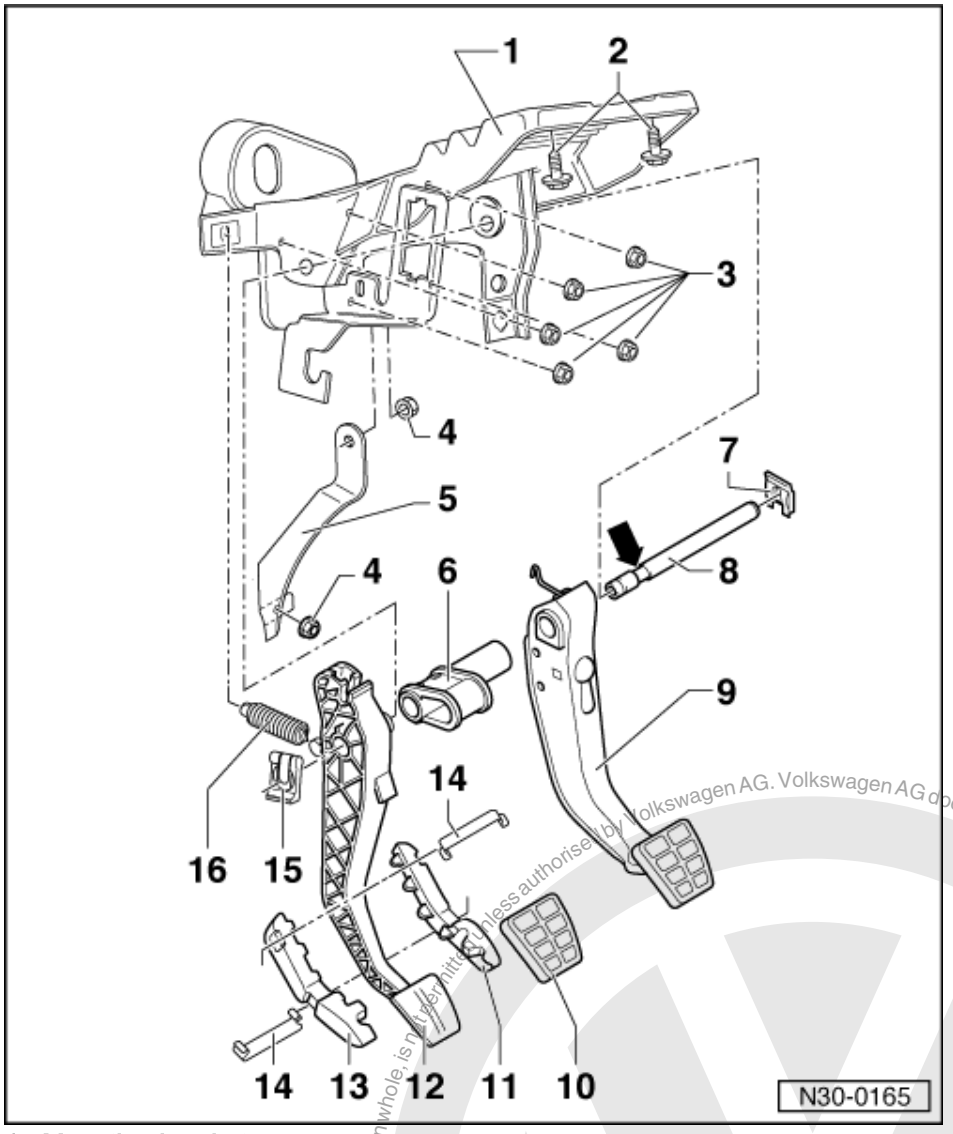

1 Mounting bracket
- Before removal remove steering column with column tube

=> Running gear; Repair group 48; Assembly overview: Steering column, column tube, steering wheel and steering wheel with airbag; removing and installing column tube with steering column. Assembly overview: Steering column, column tube, steering wheel and steering wheel with airbag removing and installing column tube with steering column.

- Separate brake pedal from master brake cylinder

=> Repair group 46; Handbrake lever - assembly overview; separating brake pedal from brake servo. Handbrake lever - assembly overview separating brake pedal from brake servo.

2 Hexagon bolt, 25 Nm
3 Self-locking hexagon nut, 25 Nm
- Qty. 5
- For mounting bracket to stud/brake servo
- Always renew

Protected by copyright. Copying for private or commercial purposes, in part or in whole, is not permitted unless authorised by Volkswagen AG. Volkswagen AG does not guarantee or accept any liability with respect to the correctness of information in this document. Copyright by Volkswagen AG.
satelettronica

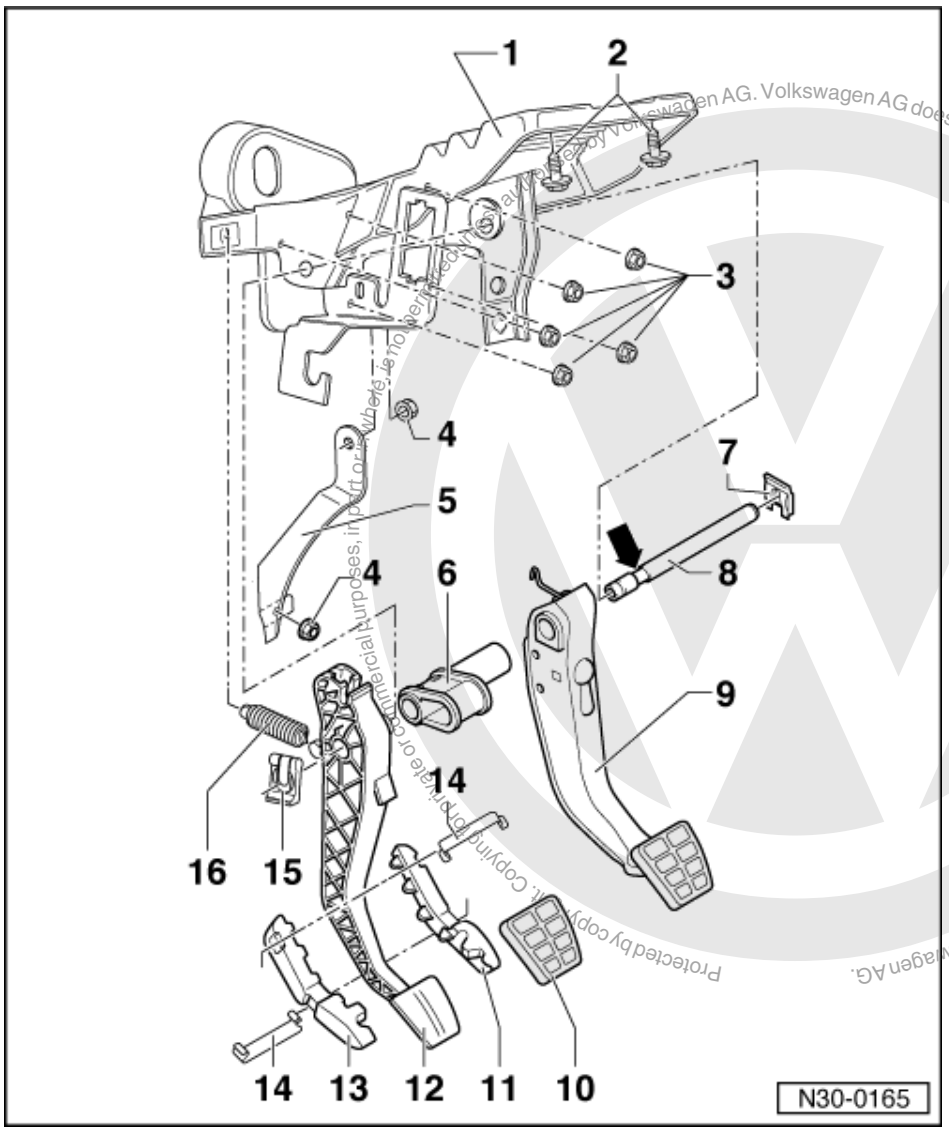

Protected by copyright. Copying for private or commercial purposes, in part or entirely, is not permitted without the prior consent of Volkswagen AG. Volkswagen AG does not guarantee or accept any liability with respect to the correctness of information in this document. Copyright by Volkswagen AG.

satelettronica

4 Self-locking hexagon nut, 25 Nm
- Qty. 2
- Always renew

5 Support

6 Mounting bush
- For mounting the steering column

7 Securing clip
- Removing and installing => Page 17

8 Pivot pin for clutch and brake pedal
- Installation position: The groove (arrow) is located on the clutch pedal side.

9 Brake pedal

10 Cap

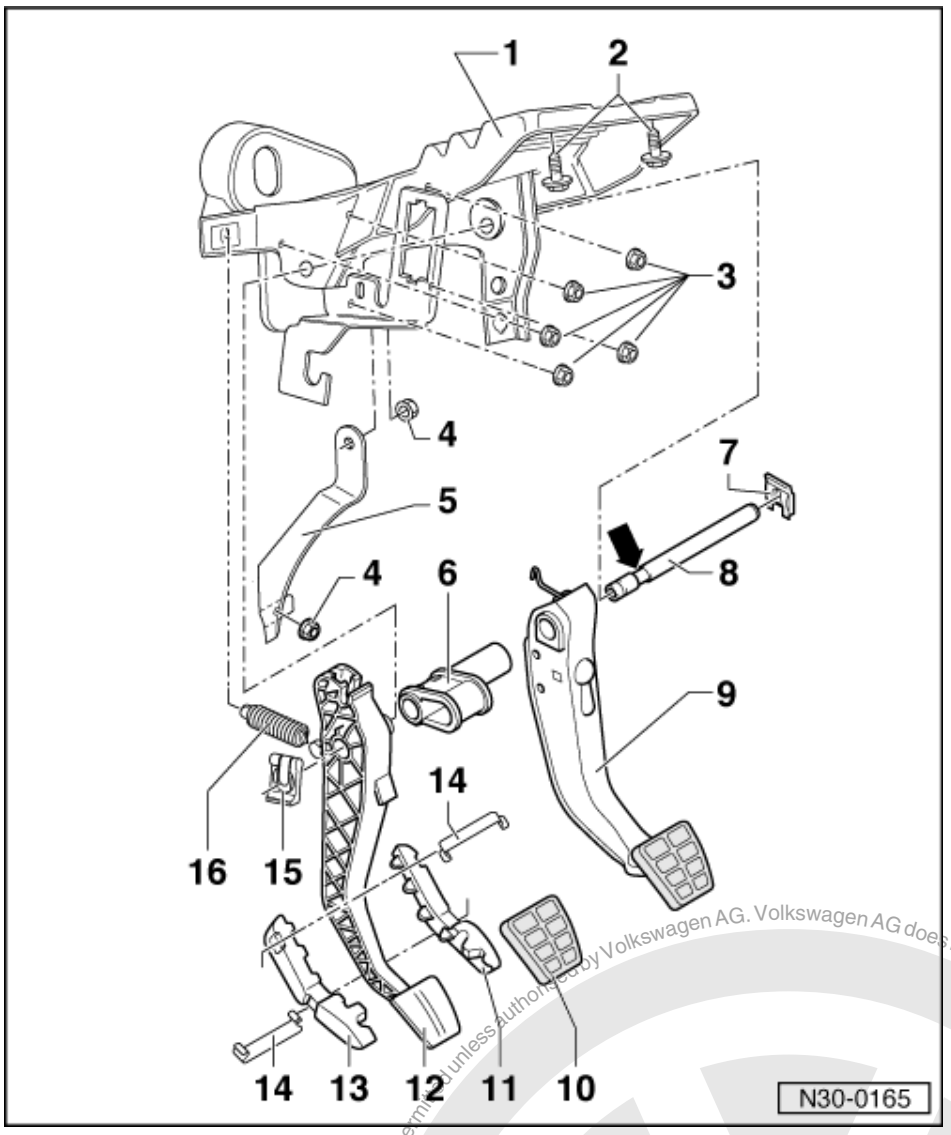

11 Balance weight
- Insert on left of clutch pedal
- Only fits in one position

12 Clutch pedal
- Removing and installing => Page 17

13 Balance weight
- Insert on right of clutch pedal
- Only fits in one position

14 Clip
- Balance weight to clutch pedal
- Engage from above or below

15 Securing clip
- Removing and installing => Page 17

16 Over-centre spring
- Removing and installing => Page 15

Protected by copyright. Copying for private or commercial purposes, in part or in whole, is not permitted unless authorised by Volkswagen AG. Volkswagen AG does not guarantee or accept any liability with respect to the correctness of information in this document. Copyright by Volkswagen AG.
satelettronica

1.3 - Removing and installing over-centre spring

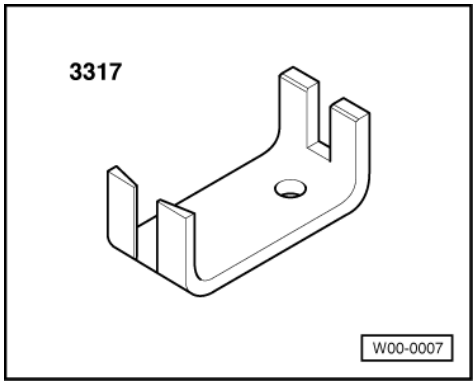

Special tools and workshop equipment required

- 3317 Installation clamp

Removing

- Disconnect earth strap from battery

Note:

Note radio coding for vehicles with coded radio.

- Tension clutch cable and detach at gearbox =>Page 24 .

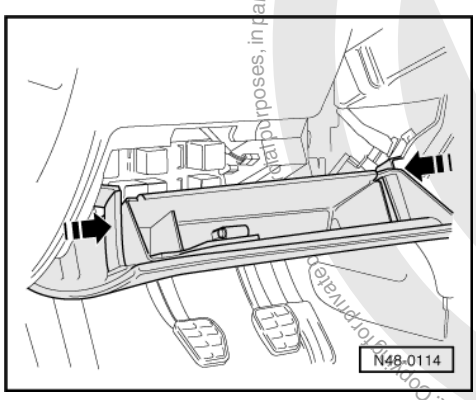

- -> Pull stowage compartment, below dash panel, out of mountings but first push stops in direction of arrow.

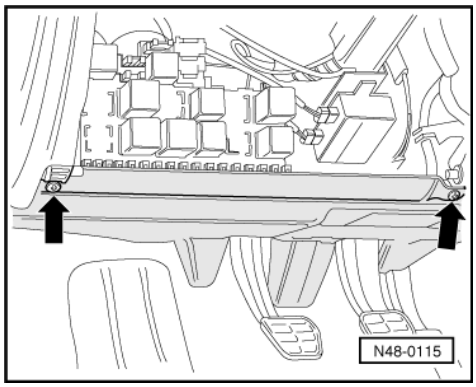

- -> Unbolt cover (arrows)
- Unhook relay plate from mountings;

Protected by copyright. Copying for private or commercial purposes, in part or in whole, is not permitted unless authorised by Volkswagen AG. Volkswagen AG does not guarantee or accept any liability with respect to the correctness of information in this document. Copyright by Volkswagen AG.
satelettronica

Note:

Do not pull connectors off relays and wiring.

- Unhook electric wiring from mountings

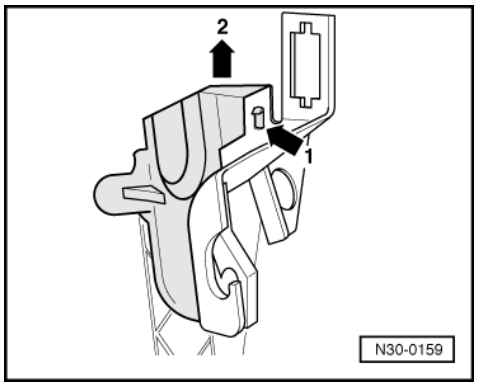

- -> Remove cover for clutch pedal from mounting bracket (arrows -1- and -2-).

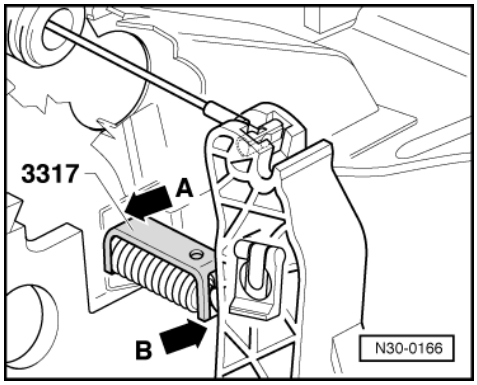

- -> Depress clutch pedal slightly (over-centre spring tensioned to maximum) and press on installation clamp 3317 from top right.

Note:

The drilling faces towards clutch pedal.

- Depress clutch pedal and take out over-centre spring together with retaining clamp 3317 downwards to left.

Installing

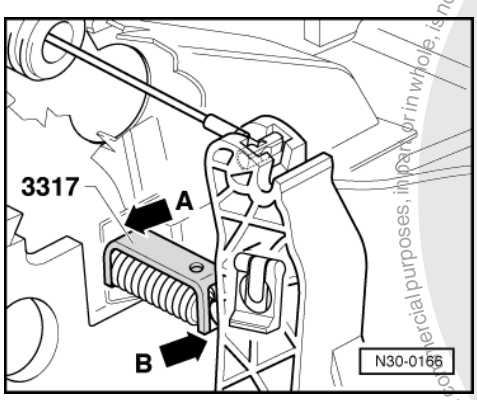

- Operate clutch pedal.
- -> First insert over-centre spring into rear mounting (arrow A), then press front upwards until the retaining clamp seats on the mounting lug of the clutch pedal (arrow B).

Protected by copyright. Copying for private or commercial purposes, in part or in whole, is not permitted unless authorised by Volkswagen AG. Volkswagen AG does not guarantee or accept any liability with respect to the correctness of information in this document. Copyright by Volkswagen AG.
satelettronica

- Take out retaining clamp whilst bringing clutch pedal to rest position.

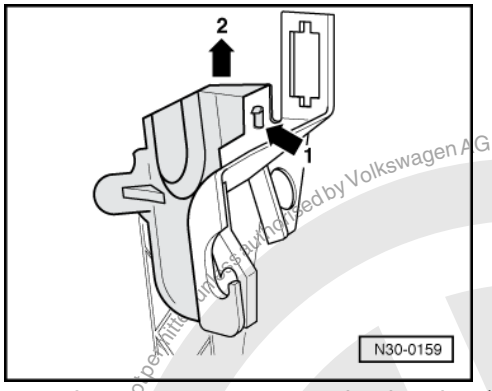

- -> Locate cover on mounting bracket (arrows -1- and -2-).
- Insert relay plate into mounting; check wiring and relay connectors and press fully home if necessary.
- Install cover and stowage compartment below dash panel.
- Install clutch cable on gearbox => Page 25 .
- Check clutch cable function =>Page 22

1.4 - Removing and installing clutch pedal

Removing

- Disconnect earth strap from battery

Note:

Note radio coding for vehicles with coded radio.

- Fully depress clutch pedal onto stop at least 5 times.
- Tension clutch cable and detach at gearbox =>Page 24 .
- Remove stowage compartment and cover; unhook relay plate from mountings => from Page 15 .

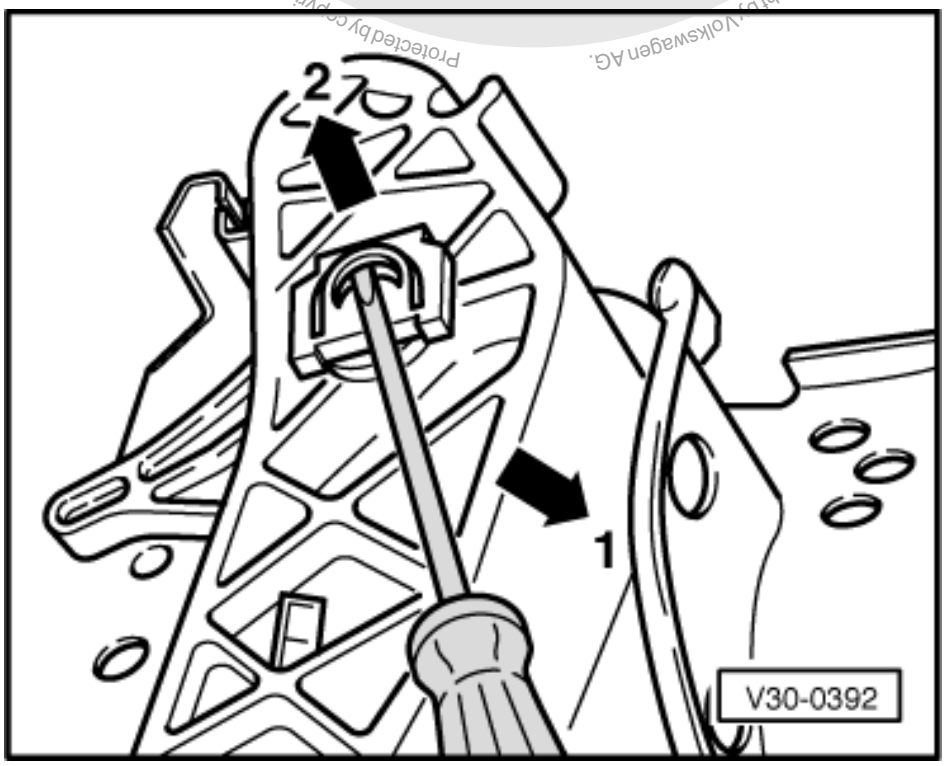

Protected by copyright. Copying for private or commercial purposes, in part or in whole, is not permitted unless authorised by Volkswagen AG. Volkswagen AG does not guarantee or accept any liability with respect to the correctness of information in this document. Copyright by Volkswagen AG.
satelettronica

- Removing over-centre spring => Page 15 .
- Unhook clutch cable from clutch pedal.
- -> Remove clutch pedal securing clip from pivot pin, by levering tab in direction of arrow -1- with a screwdriver then pushing off in direction of arrow -2-.

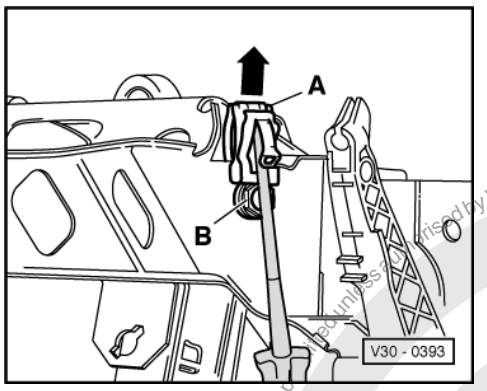

- -> Take brake pedal side pivot pin securing clip off towards switch panel (direction of arrow) by locating a screwdriver under the retaining clip -A-.
- Pull clutch and brake pedal pivot pin out to the right, until the clutch pedal can be removed.

Installing

- Lubricate all bearings and contact surfaces with MoS2 grease.
- Align clutch pedal/brake pedal pivot pin so that the flats -B- are vertical before fitting the brake pedal side securing clip =>Illustration V30-0393.
- Fit clutch pedal onto pivot pin.
- Fit securing clips onto brake pedal end of pivot pin and onto clutch pedal end.
- Attach clutch cable at gearbox => Page 25 .
- Install over-centre spring => Page 15 .
- Check clutch cable function =>Page 22

Protected by copyright. Copying for private or commercial purposes, in part or in whole, is not permitted unless authorised by Volkswagen AG. Volkswagen AG does not guarantee or accept any liability with respect to the correctness of information in this document. Copyright by Volkswagen AG.
satelettronica

1.5 - Assembly overview - Mechanics

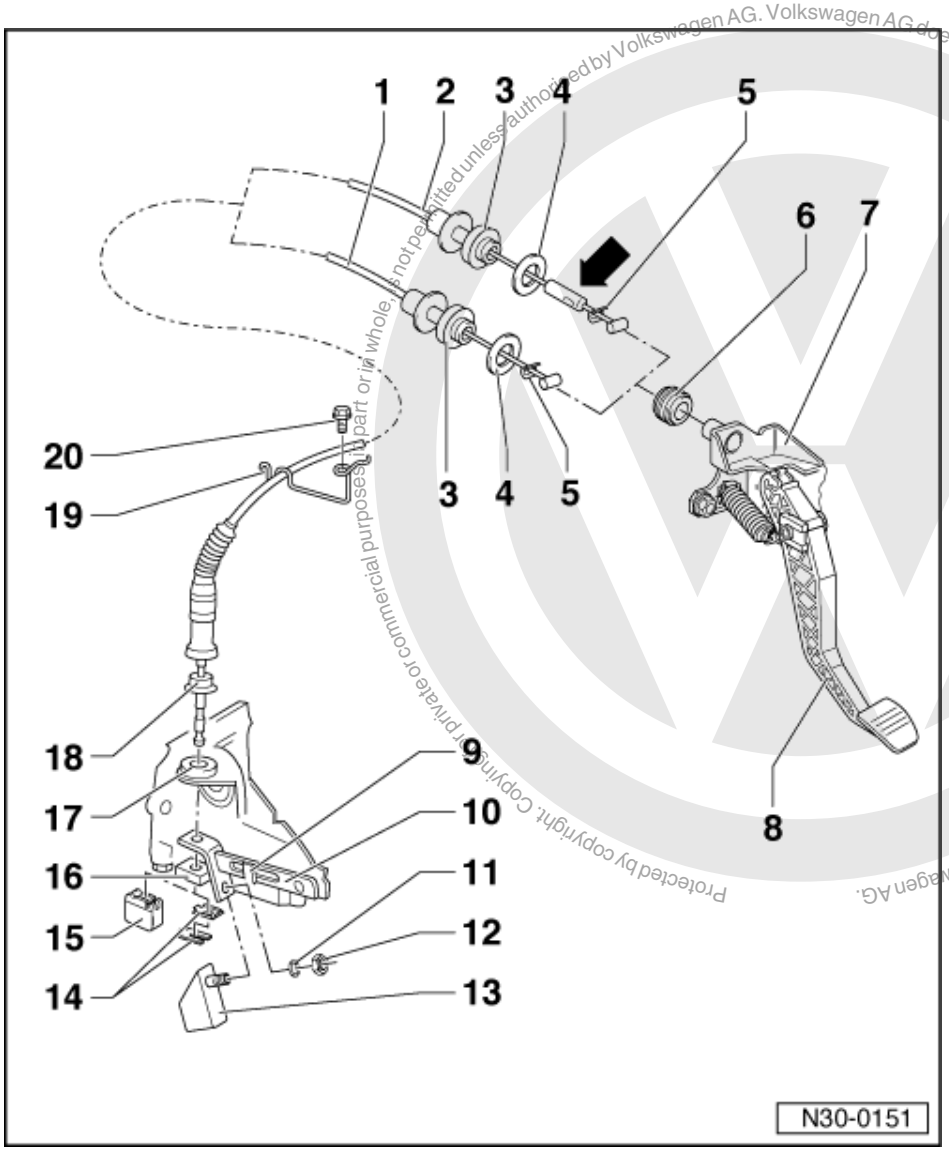

Protected by copyright. Copying for private or commercial purposes, in part or in whole, is not permitted unless authorised by Volkswagen AG. Volkswagen AG does not guarantee or accept any liability with respect to the correctness of information in this document. Copyright by Volkswagen AG.

satelettronica

Note:

Before renewing clutch cable, perform functional check =>Page 22 .

1 Clutch cable
- Removing and installing
  => Page 24

2 Clutch cable
- With integral damper (arrow)
- Removing and installing
  => Page 24

3 Rubber buffer

4 Washer

5 Mounting plate
- For clutch cable in clutch pedal

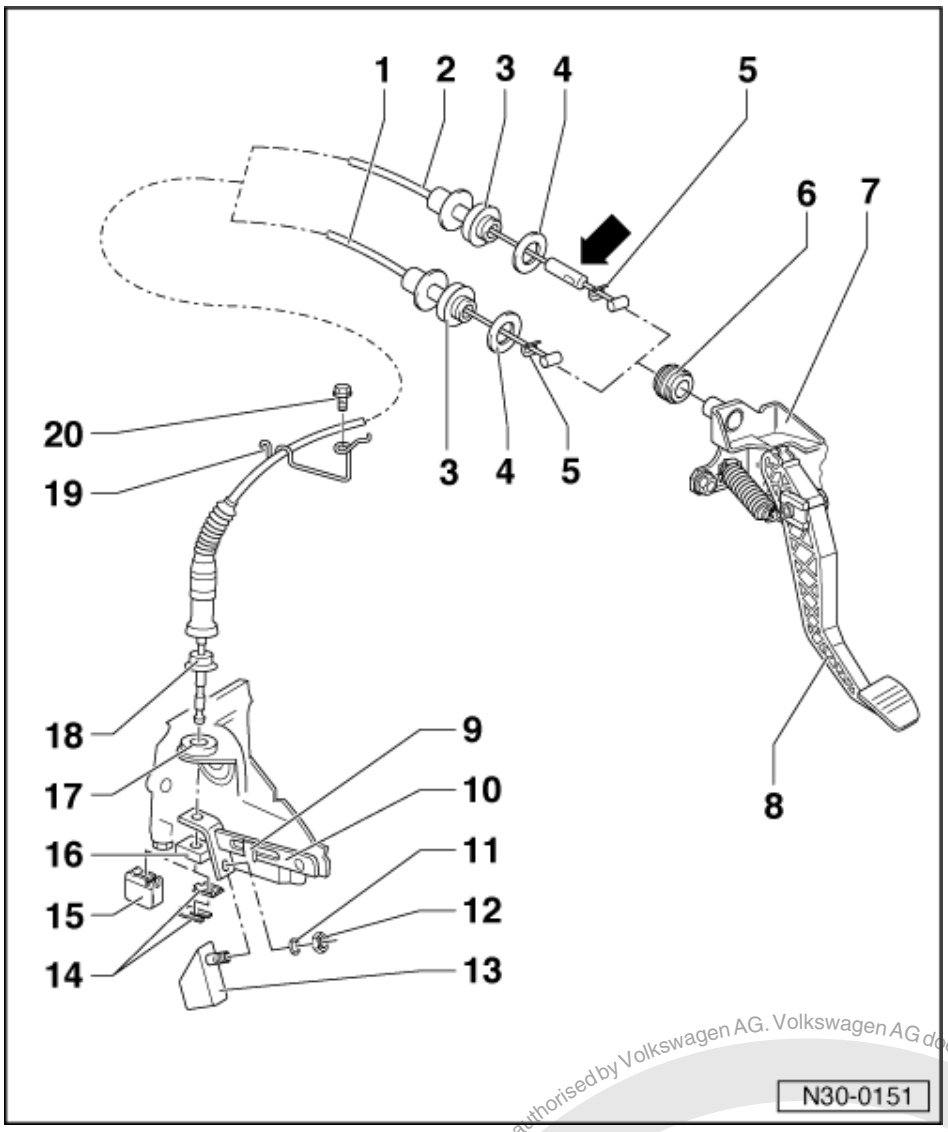

6 Bellows
7 Mounting bracket
- Removing and installing =>Page 12

8 Clutch pedal
- Removing and installing => Page 17

9 Stop buffer
10 Release shaft
11 Washer
12 Hexagon nut, 25 Nm
13 Balance weight
- Allocation

=> Replacement parts catalogue

Note:

In case of complaint, can be fitted in combination with the clutch cable (item 2) in all other vehicles.

Protected by copyright. Copying for private or commercial purposes, in part or in whole is not permitted unless authorised by Volkswagen AG. Volkswagen AG does not guarantee or accept any liability with respect to the correctness of information in this document. Copyright by Volkswagen AG.

satelettronica

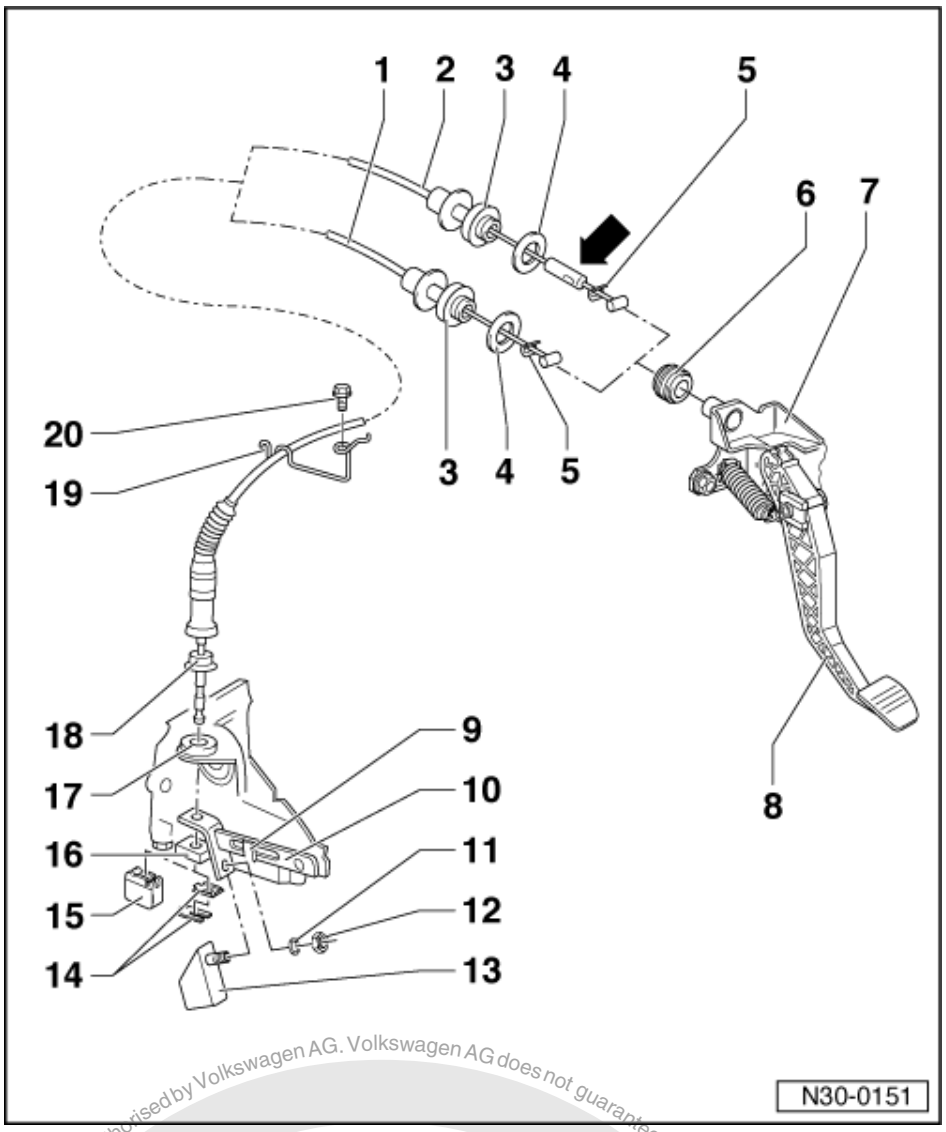

14 Clutch cable securing parts
- Deleted when balance weight is installed (item 15).

15 Balance weight
- Allocation

=> Replacement parts catalogue

- Installed in conjunction with clutch cable (item 2)

16 Rubber buffer
17 Gearbox
18 Rubber guide
19 Bracket
20 Bolt
- Retainer to body

satelettronica
Protected by copyright. Copying for private or commercial purposes, in part or in whole, is not permitted unless authorised by Volkswagen AG. Volkswagen AG does not guarantee or accept any liability with respect to the correctness of information in this document. Copyright by Volkswagen AG.

1.6 - Checking function of clutch cable

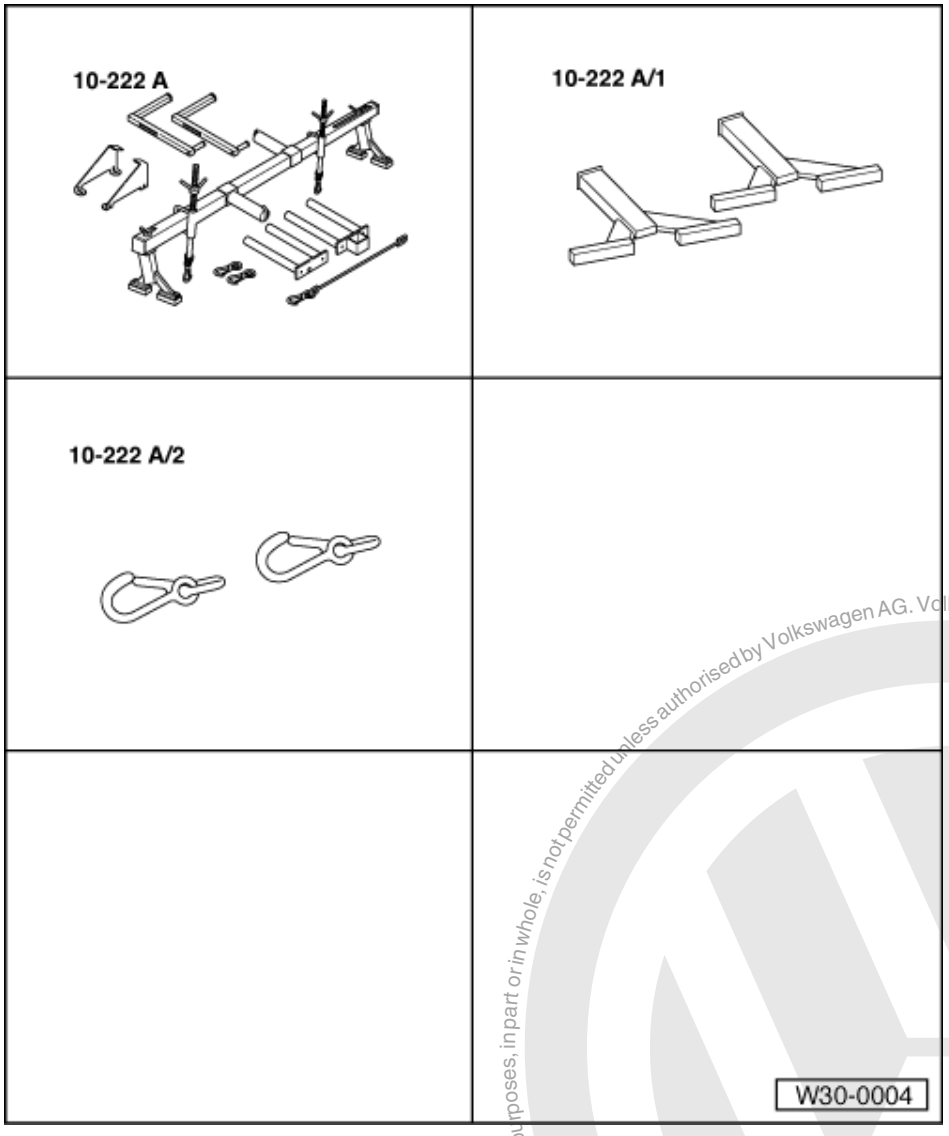

Special tools and workshop equipment required

- 10-222 A Support
- 10-222 A/1 Support
- 10-222 A/2 Hooks

- The clutch cable adjustment mechanism must be undamaged.

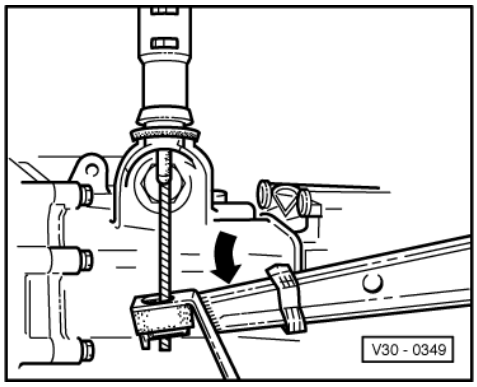

Protected by copyright. Copying for private or commercial purposes, in part or in whole, is not permitted unless authorised by Volkswagen AG. Volkswagen AG does not guarantee or accept any liability with respect to the correctness of information in this document. Copyright by Volkswagen AG.
satelettronica

- Fully depress clutch pedal onto stop at least 5 times.
- -> Move release lever opposite to direction of operation (arrow) approx. 10 mm. When doing this the release lever must move easily.

Note:

Always operate clutch pedal at least 5 times before repeating functional test.

Making clutch cable adjusting mechanism serviceable.

If a functional check of the adjusting mechanism cannot be carried out as described then it is possible that the mechanism has been rendered unserviceable by mishandling (e.g. attached to release lever under tension).

Identification:
The clutch release lever cannot be moved opposite to the direction of operation, even after operating clutch pedal several times.

The non-functioning adjusting mechanism will lead to clutch slip and therefore premature clutch wear.

Notes:

- Renewing cable is to be prevented if possible.

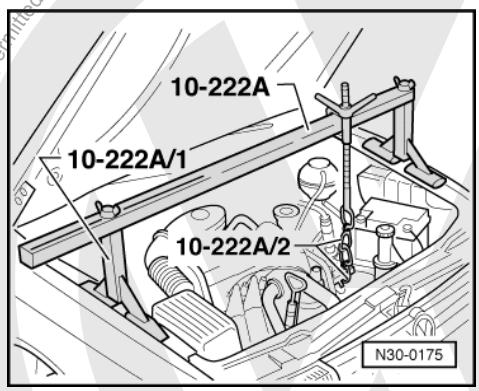

- Return adjustment mechanism to a functional condition as follows:

- -> Assemble support bar 10-222 A with hooks 10-222 A/2.
- Depress clutch pedal and hold (2nd mechanic).

- Release lever on gearbox is now in operating position.

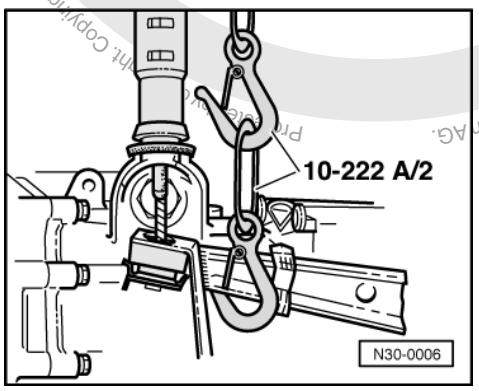

- -> Arrest release lever in this position with hooks 10-222 A/2.
- Pull clutch pedal back to rest position.

Copyright by Volkswagen AG. Volkswagen AG does not guarantee or accept any liability with respect to the correctness of information in this document. Copying for private or commercial purposes, in part or in whole, is not permitted unless authorised by Volkswagen AG.
satelettronica

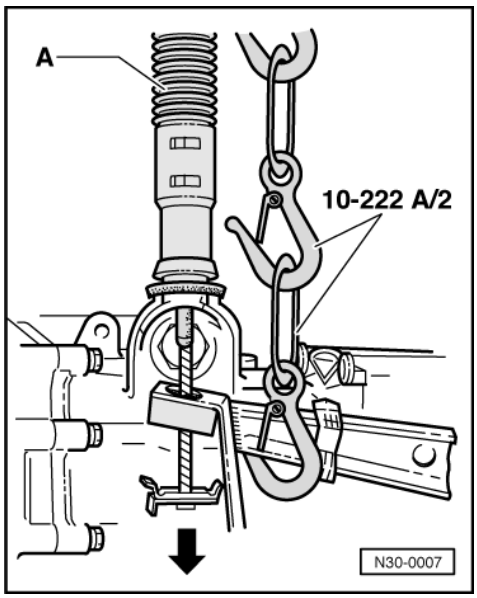

- -> Pull cable down (direction of arrow) until the adjustment mechanism in area of bellows -A- can be pressed together.
- Bring release lever on gearbox to rest position.
- Check clutch cable function =>Page 22
- Remove support bar 10-222A.

1.7 - Removing and installing clutch cable

- If the clutch is cause for complaint check function of clutch cable before removing => Page 22 .

Removing

- Disconnect earth strap from battery

Note:

Note radio coding for vehicles with coded radio.

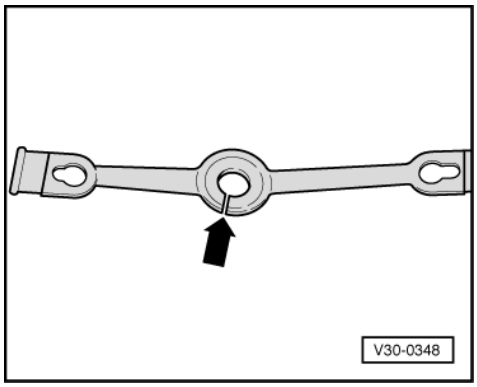

- If no retaining strap is present then the adjusting mechanism must be tensioned with the retaining strap illustrated to enable it to be removed and installed. It is enclosed with new cables to tension the adjusting mechanism.
- -> The ring (arrow) on retaining strap must be cut open.
- Do not kink the clutch cable, otherwise correct functioning of the adjuster mechanism cannot be guaranteed.
- Fully depress clutch pedal onto stop at least 5 times.

satelettronica
Protected by copyright. Copying for private or commercial purposes, in part or in whole, is not permitted unless authorised by Volkswagen AG. Volkswagen AG does not guarantee or accept any liability with respect to the correctness of information in this document. Copyright by Volkswagen AG.

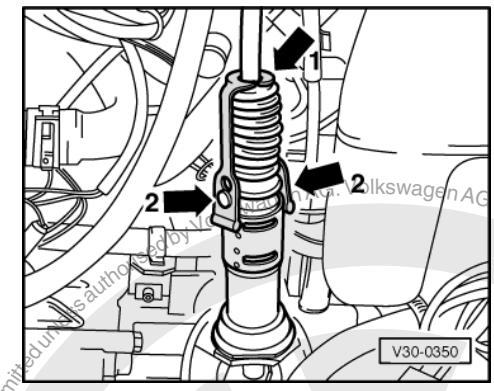

- -> Hook retaining strap eye on above protective sleeve (arrow 1).
- Press adjustment mechanism together in area of protective sleeve.

Note:

There is a defect if the adjustment mechanism cannot be pressed together. In this case the clutch cable must be made fully functional again =>Page 22 .

- Hook ends of retaining strap onto both adjustment mechanism pins (arrow 2) (2nd mechanic).

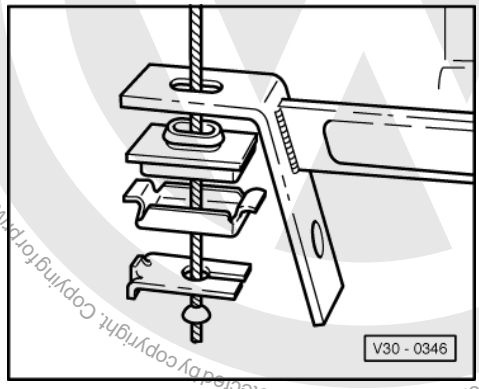

- -> Unhook securing parts from release shaft lever (vehicles without vibration damping weight shown here).
- Removing over-centre spring => Page 15 .
- Unhook clutch cable from clutch pedal.

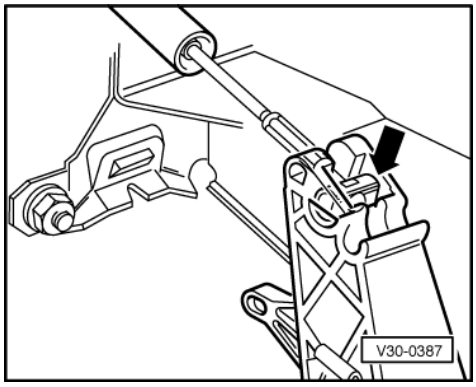

Installing

(Clutch cable under tension)

- Lubricate clutch cable clutch pedal mounting point with MoS2 grease.
- -> Hook clutch cable into clutch pedal -front recess- (arrow).

Copyright by Volkswagen AG does not guarantee or accept any liability with respect the correctness of information in this document. Copyright by Volkswagen AG. Protected by copyright. Copying for private or commercial purposes, in part or in whole, is not permitted unless authorised by Volkswagen AG.
satelettronica

- Guide clutch end piece into mounting on gearbox and release shaft lever, when doing this do not damage cable plastic casing.

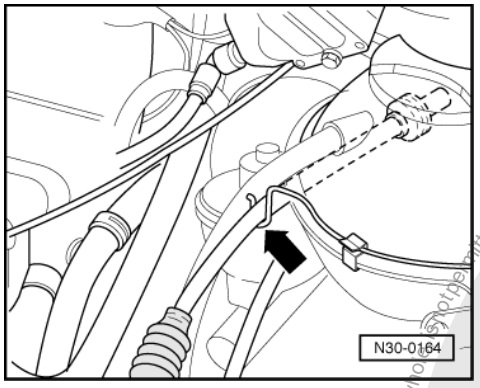

- Attach securing parts to release shaft lever =>V30-0346, Page 25 .
- -> Clip clutch cable into wire retainer (arrow).
- After installing clutch pedal remove retaining strap in a manner so that it can be used again.
- Install over-centre spring => Page 15 .
- Fully depress clutch pedal onto stop at least 5 times.
- Check clutch cable function =>Page 22

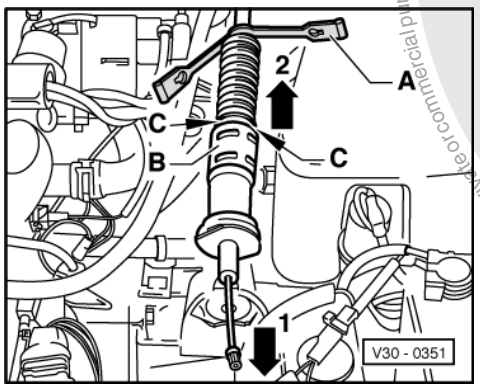

(Clutch cable not under tension)

- -> Hook retaining strap eye -A- on above protective sleeve (arrow).
- Hook clutch cable into clutch pedal =>Page 25 .
- Pull end piece of cable in direction of arrow -1-, hold in this position and move the adjusting mechanism -B- to and fro several times, until it can be pressed together in direction of bulkhead (direction of arrow -2-).
- Hold adjustment mechanism in this position and hook retaining strap lugs -C- into pins on adjustment mechanism (2nd mechanic).
- Install clutch cable on gearbox => Page 25 .
- Install over-centre spring => Page 15 .
- After installing clutch cable remove retaining strap.
- Check clutch cable function =>Page 22

Protected by copyright. Copying for private or commercial purposes, in any form or by any means, is not permitted unless authorised by Volkswagen AG. Volkswagen AG does not guarantee or accept any liability with respect to the correctness of information in this document. Copyright by Volkswagen AG.
satelettronica

1.8 - Assembly overview - Pedal cluster for hydraulically operated clutch

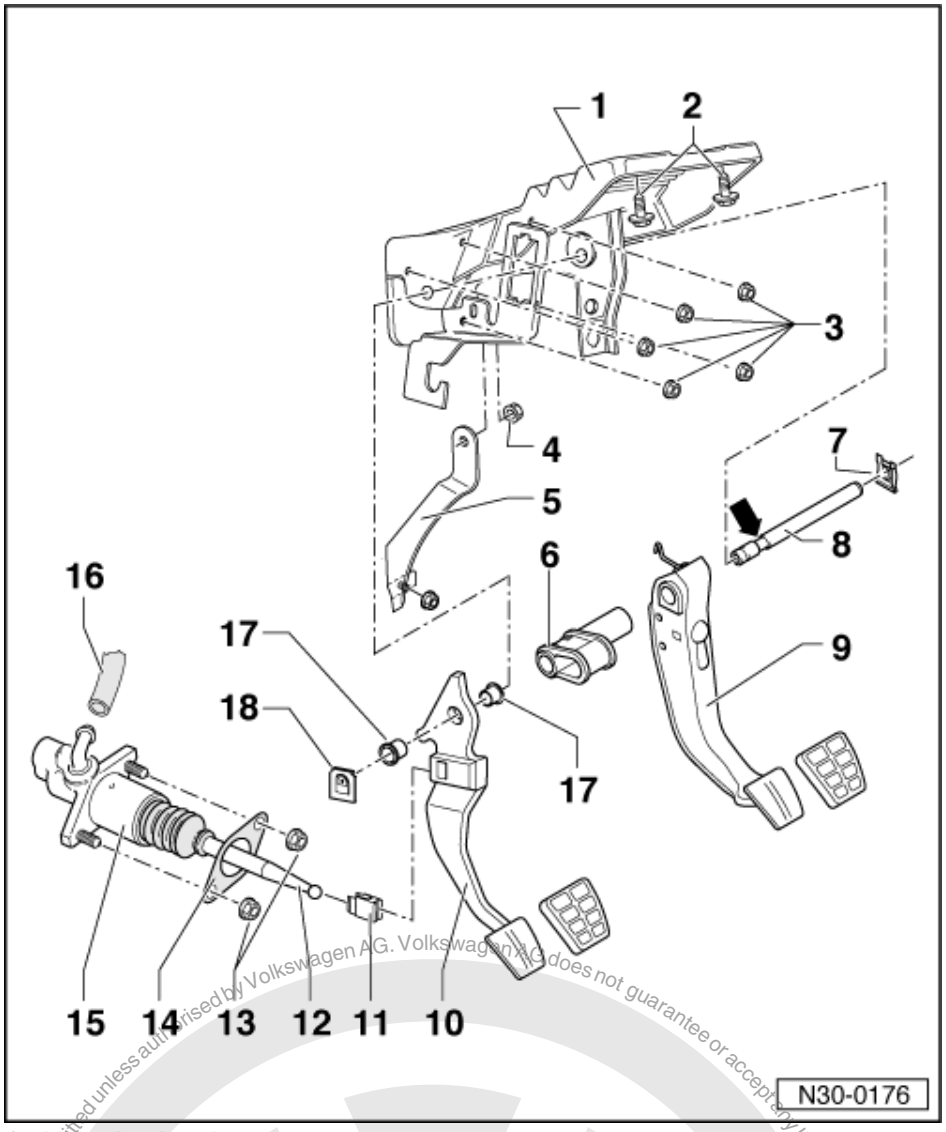

1 Mounting bracket

- Before removal remove steering column with column tube

=> Running gear; Repair group 48; Assembly overview: Steering column, column tube, steering wheel and steering wheel with airbag; removing and installing column tube with steering column. Assembly overview: Steering column, column tube, steering wheel and steering wheel with airbag removing and installing column tube with steering column.

- Separate brake pedal from master brake cylinder

=> Repair group 46; Handbrake lever - assembly overview; separating brake pedal from brake servo. Handbrake lever - assembly overview separating brake pedal from brake servo.

2 Hexagon bolt, 25 Nm

satelettronica
Protected by copyright. Copying for private or commercial purposes, in part or in whole is not permitted unless authorised by Volkswagen AG. Volkswagen AG does not guarantee or accept any liability with respect to the correctness of information in this document. Copyright by Volkswagen AG.

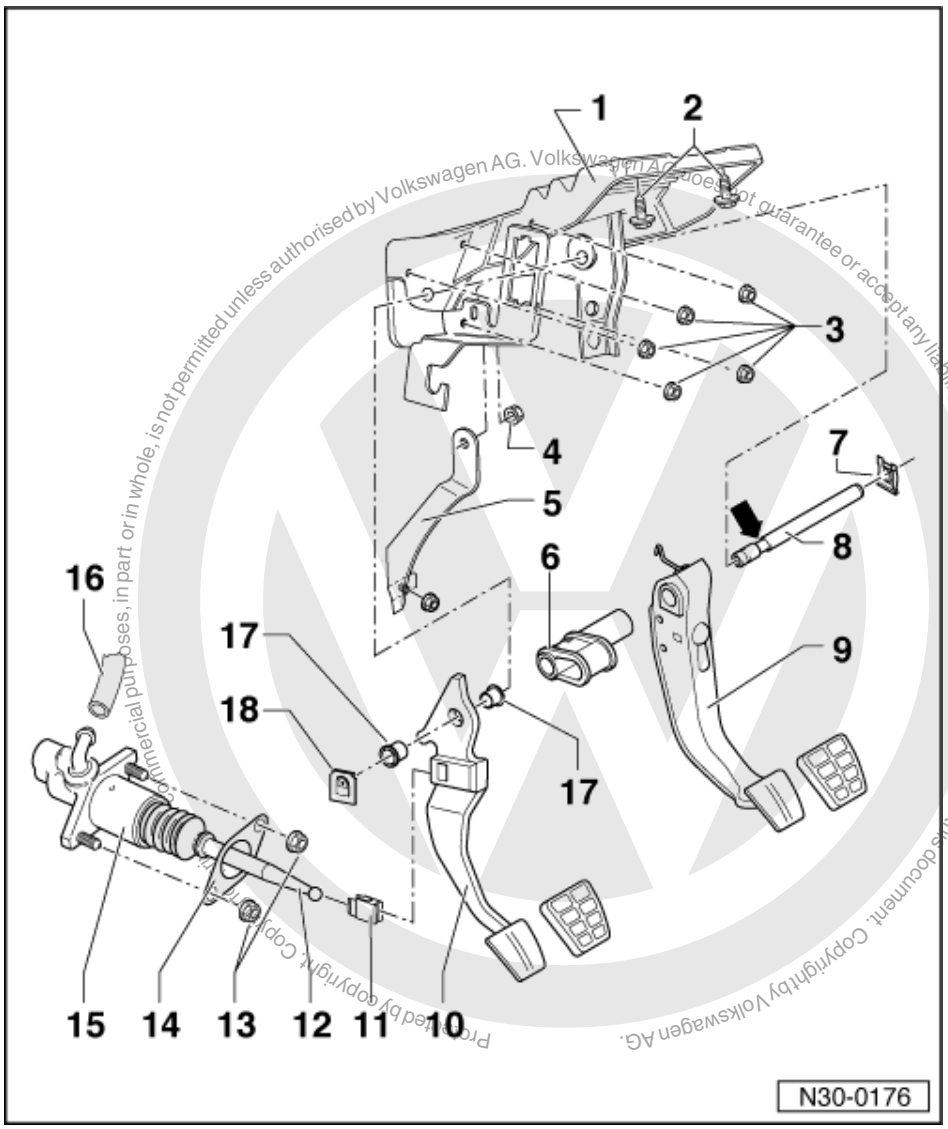

Protected by copyright. Copyright by Volkswagen AG. Volkswagen AG does not guarantee or accept any liability with respect to the correctness of information in this document. Copyright by Volkswagen AG. Copying for commercial purposes, in part or in whole, is not permitted unless authorised by Volkswagen AG.

3 Self-locking hexagon nut, 25 Nm
- Qty. 5
- For mounting bracket to stud/brake servo
- Always renew

4 Self-locking hexagon nut, 25 Nm
- Qty. 2
- Always renew

5 Support

6 Mounting bush
- For mounting the steering column

7 Securing clip
- Removing and installing => Page 31

8 Pivot pin for clutch and brake pedal
- Installation position: The groove (arrow) is located on the clutch pedal side.

satelettronica

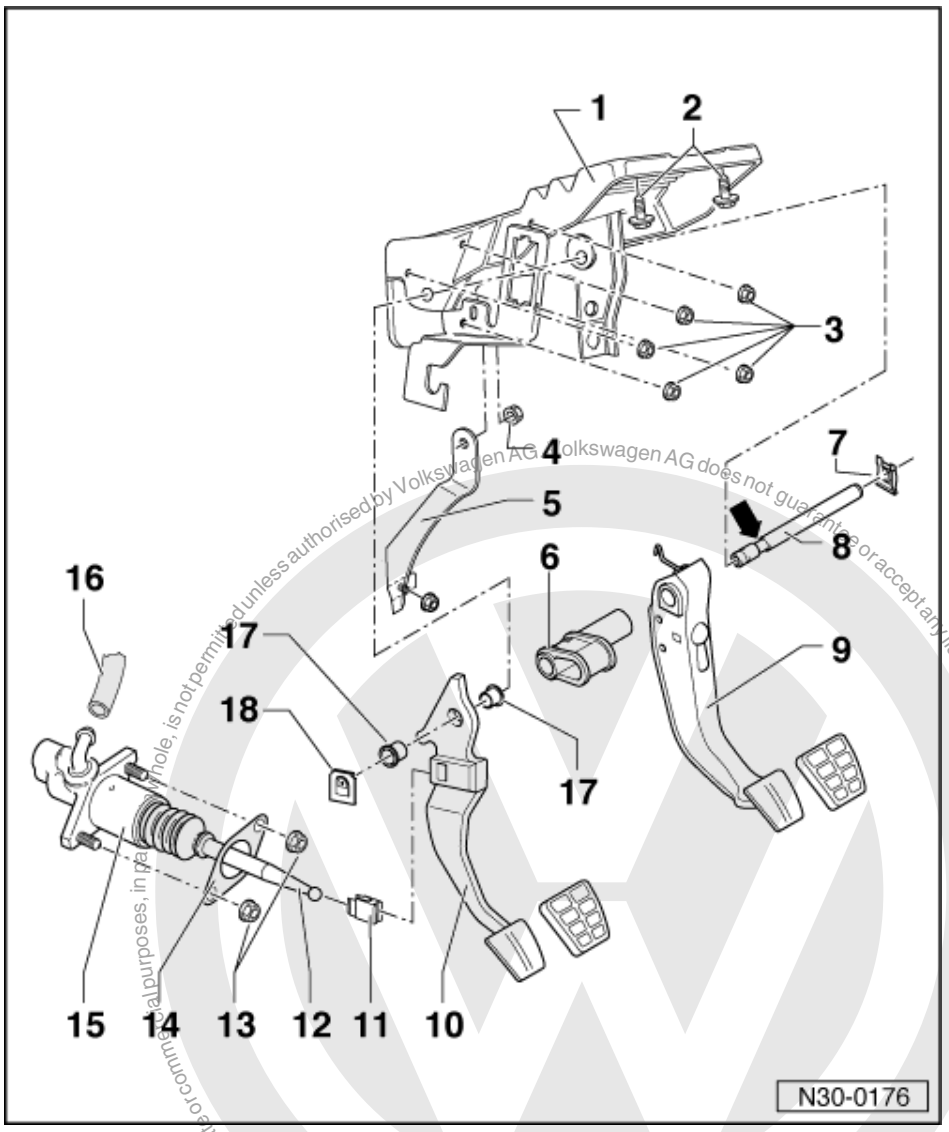

9 Brake pedal
10 Clutch pedal
- Removing and installing => Page 31

11 Retainer
- Removing and installing => Page 34

12 Clutch operating rod/master cylinder
13 Self-locking hexagon nut, 25 Nm
- Always renew

14 Seal
- Always renew

15 Master cylinder
- Removing and installing => Page 38

satelettronica

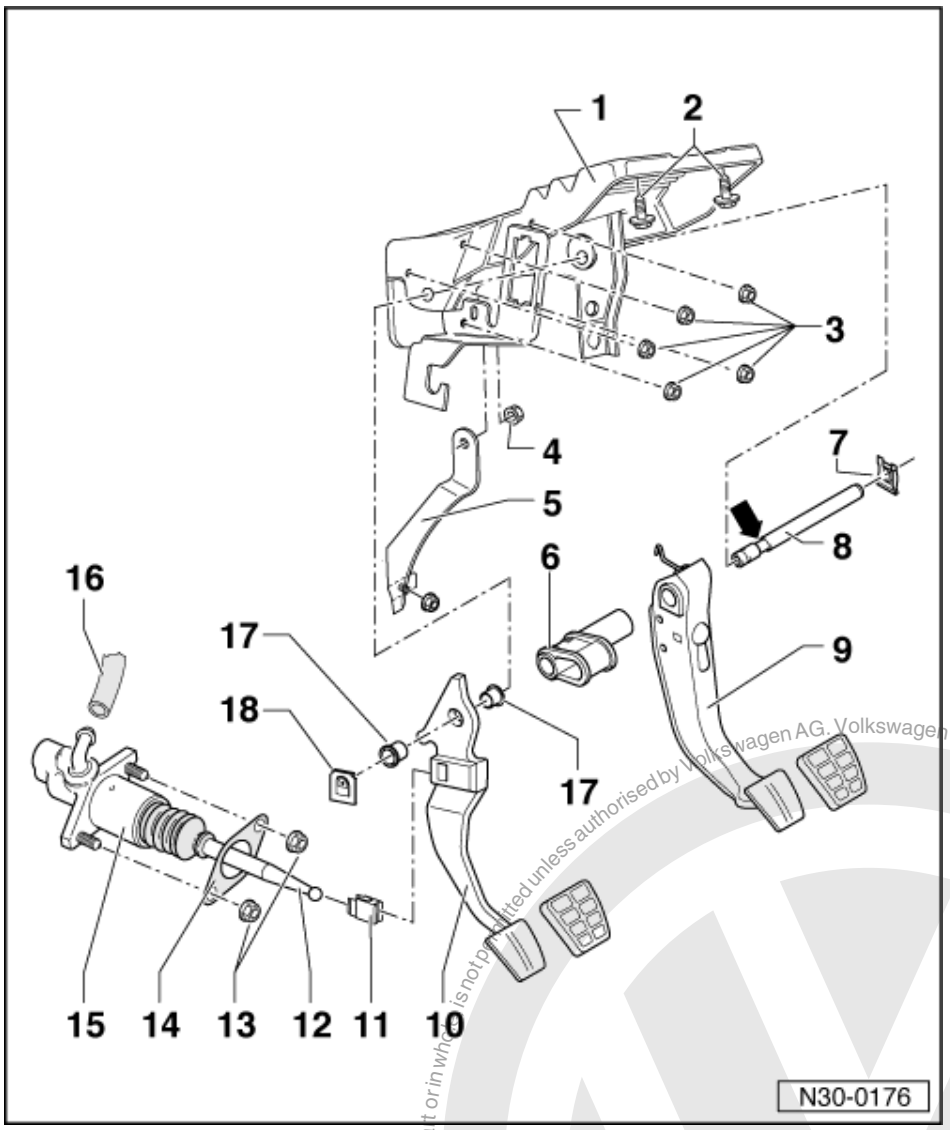

16 Supply hose

17 Mounting bush

- Check for wear, renew if necessary
- Knock out with drift
- Press in by clamping in vice, use vice clamps

18 Securing clip

- Removing and installing => Page 17

Protected by copyright. Copying for private or commercial purposes, in part or in whole is not permitted unless authorised by Volkswagen AG. Volkswagen AG does not guarantee or accept any liability with respect to the correctness of information in this document. Copyright by Volkswagen AG.
satelettronica

1.9 - Removing and installing clutch pedal

Special tools and workshop equipment required

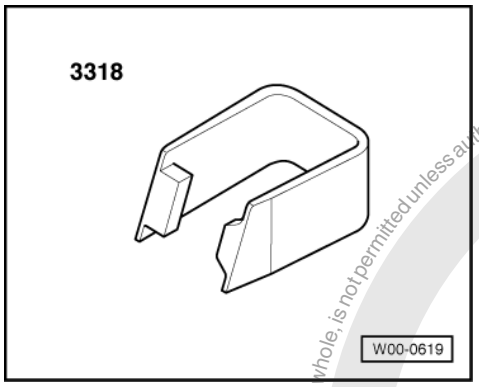

- 3318 Release tool

Removing

- Disconnect earth strap from battery

Note:

Note radio coding for vehicles with coded radio.

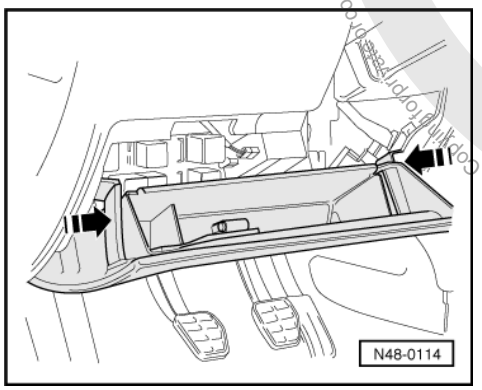

- -> Pull stowage compartment, below dash panel, out of mountings but first push stops in direction of arrow.

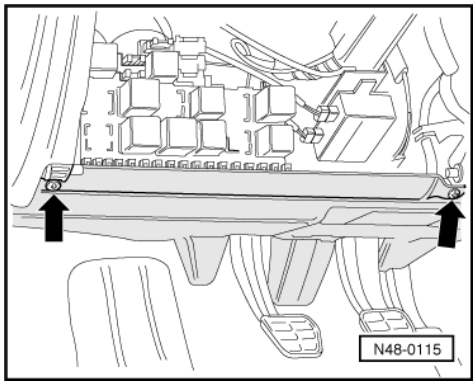

- -> Unbolt cover (arrows)
- Unhook relay plate from mounting, lay carefully to one side and support.

Protected by copyright. Copyright by Volkswagen AG. Volkswagen AG does not guarantee or accept any liability with respect to the correctness of information in this document. Copyright by Volkswagen AG. Commercial purposes, in part or in whole, is not permitted unless authorised by Volkswagen AG.
satelettronica

Note:

Do not pull connectors off relays and wiring.

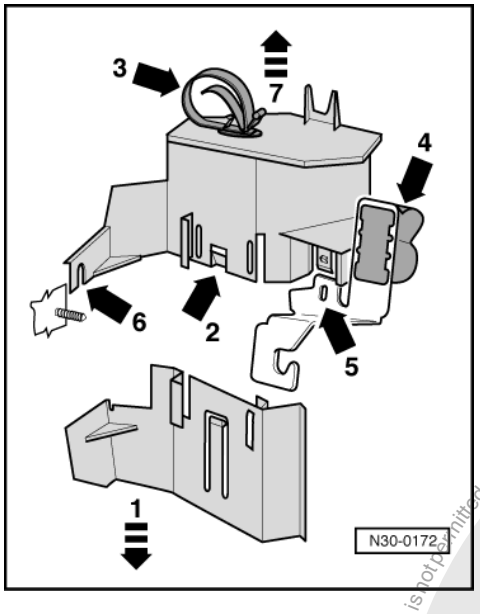

-> Remove clutch pedal cover (lower and upper parts) from pedal bracket as follows:

- Release lower part from upper part -arrow 2-, then pull lower part off upper part -arrow 1-.
- Release electric wiring from the retainer on upper part -arrow 3- and pedal bracket -arrow 4-.
- Unclip upper part from pedal bracket with a screwdriver -arrow 5- and lift slightly.
- Unhook upper part from stud on bulkhead -arrow 6-.
- Remove upper part -arrow 7-.

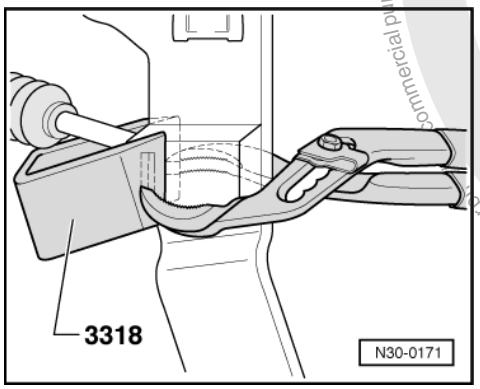

-> Separate master cylinder operating rod from clutch pedal as follows:

- Insert release tool 3318 in the cut-out in the clutch pedal. The inscription "top/oben" on the release tool faces towards dash panel.
- Press release tool together with pliers.
- Push operating rod towards engine compartment onto stop.
- Remove clutch pedal securing clip from pivot pin =>Page 17 .

Protected by copyright. Copying for commercial purposes, in whole, is not permitted unless authorised by Volkswagen AG. Volkswagen AG does not guarantee or accept any liability with respect to the correctness of information in this document. Copyright by Volkswagen AG.
satelettronica

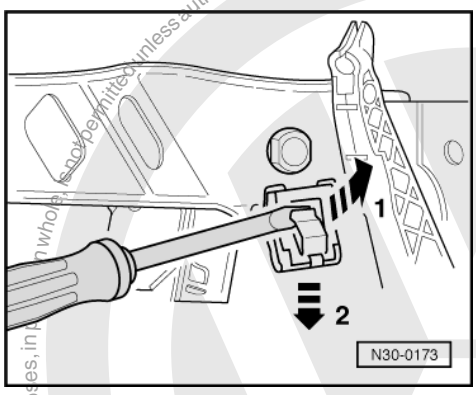

- -> Remove brake pedal securing clip from pivot pin by levering tab up with a screwdriver -arrow 1- and pushing clip off -arrow 2-.
- Pull clutch and brake pedal pivot pin out to the right, until the clutch pedal can be removed.

Installing

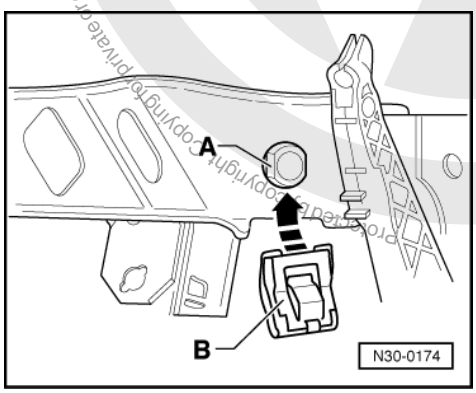

Installation is carried out in the reverse sequence, when doing this note the following:

- -> Align clutch pedal/brake pedal pivot pin so that the flats -A- are vertical to the securing clip -B- before fitting the brake pedal side securing clip.
- Fit clutch pedal onto pivot pin.
- Fit securing clips onto brake pedal end of pivot pin -arrow- and onto clutch pedal end.

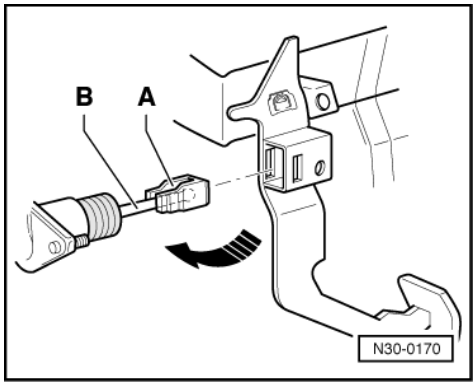

- Engage clutch pedal with operating rod/master cylinder as follows:
- -> The retainer -A- must be fitted to the master cylinder operating rod -B-.
- To engage press clutch pedal towards bulkhead (direction of arrow). Ensure correctly located.

satelettronica

1.10 - Assembly overview - Hydraulic system

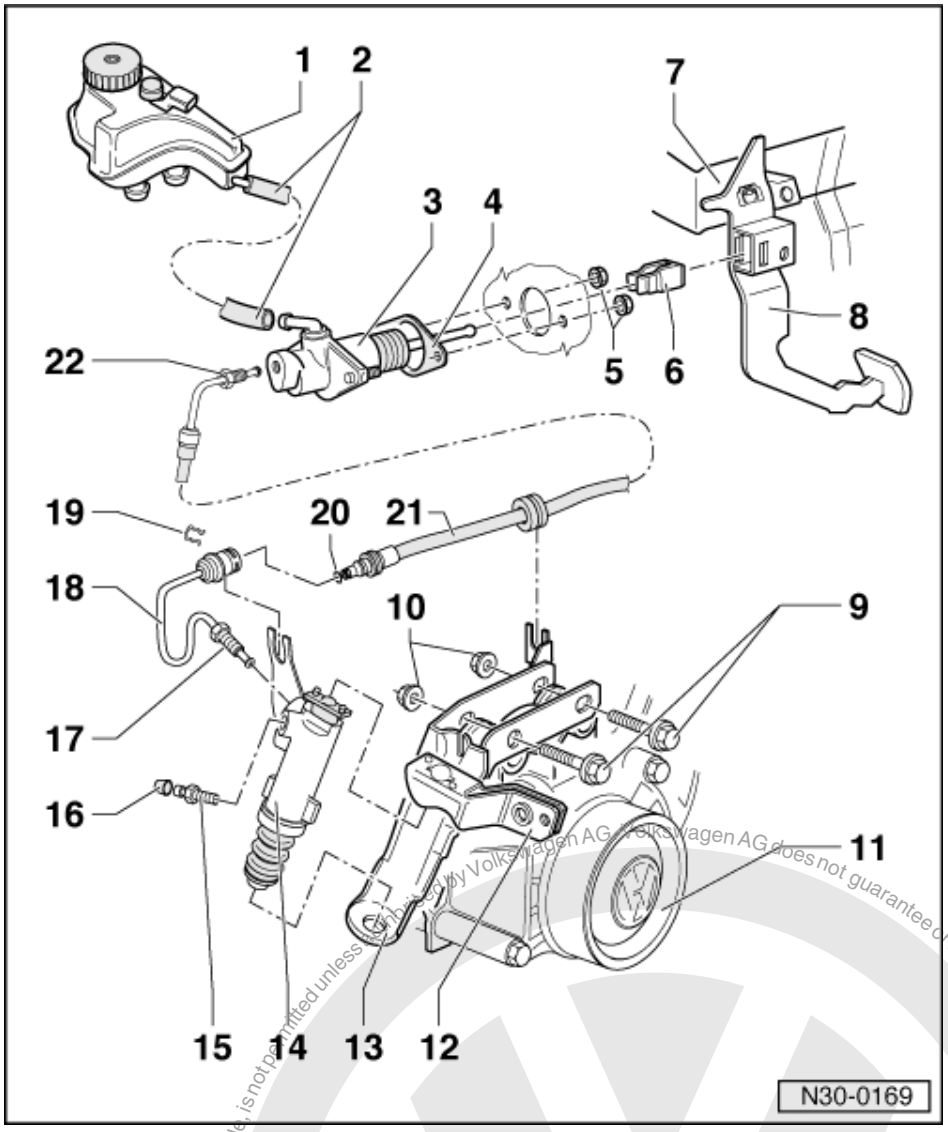

1 Brake fluid reservoir
2 Supply hose
3 Master cylinder
- Removing and installing => Page 38

4 Seal
- Always renew

5 Self-locking hexagon nut, 25 Nm
- Always renew

6 Retainer
- Replace only with master cylinder removed
- Removing =>Fig. 1
- Pressing on =>Fig. 2

Protected by copyright. Copying for private or commercial purposes, in part or in whole, is not permitted unless authorised by Volkswagen AG. Volkswagen AG does not guarantee or accept any liability with respect to the correctness of information in this document. Copyright by Volkswagen AG.
satelettronica

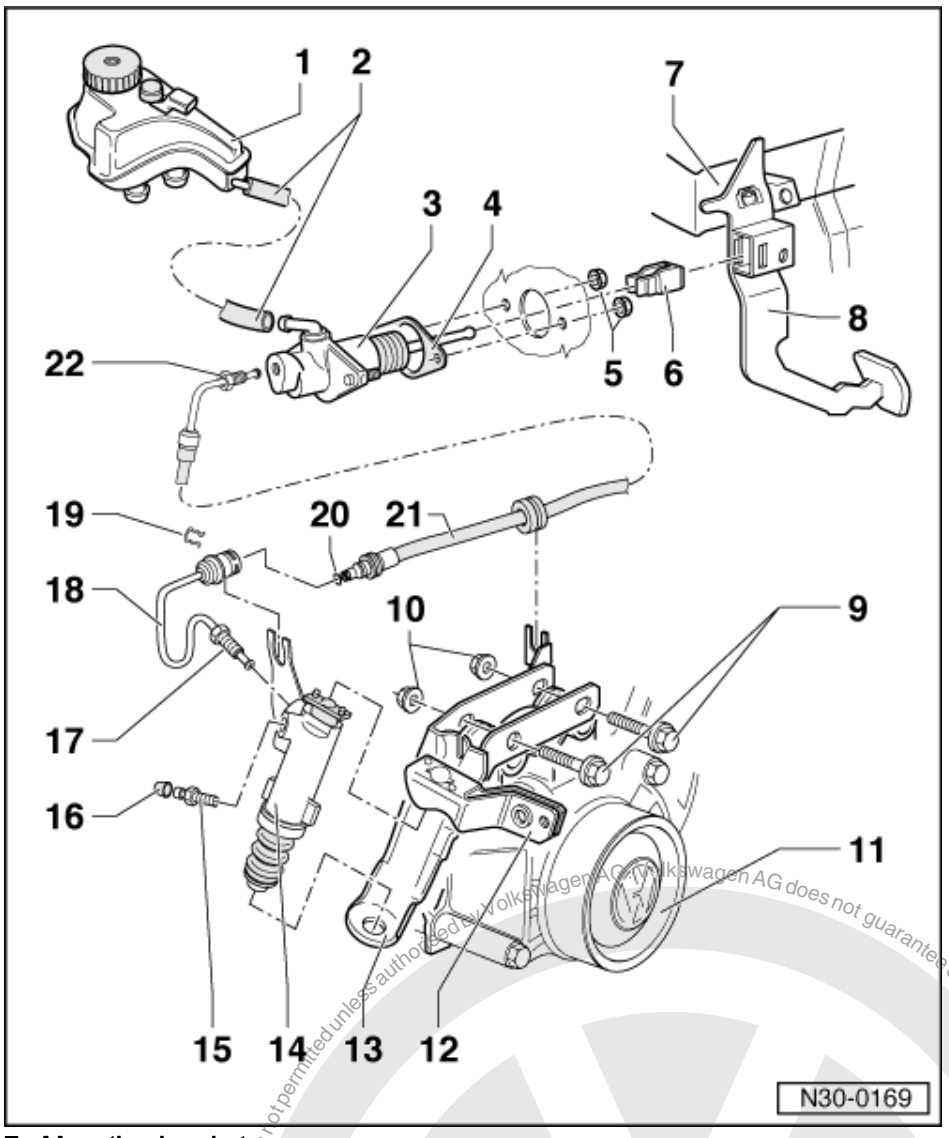

7 Mounting bracket
- Removing and installing => Page 27

8 Clutch pedal
- Removing and installing => Page 31

9 Hexagon bolt

10 Hexagon nut, 25 Nm

11 Gearbox

12 Release lever

13 Bracket
- Secured to gearbox housing cover

Protected by copyright. Copying for private or commercial purposes, in part or in whole, is not permitted unless authorised by Volkswagen AG. Volkswagen AG does not guarantee or accept any liability with respect to the correctness of information in this document. Copyright by Volkswagen AG.
satelettronica

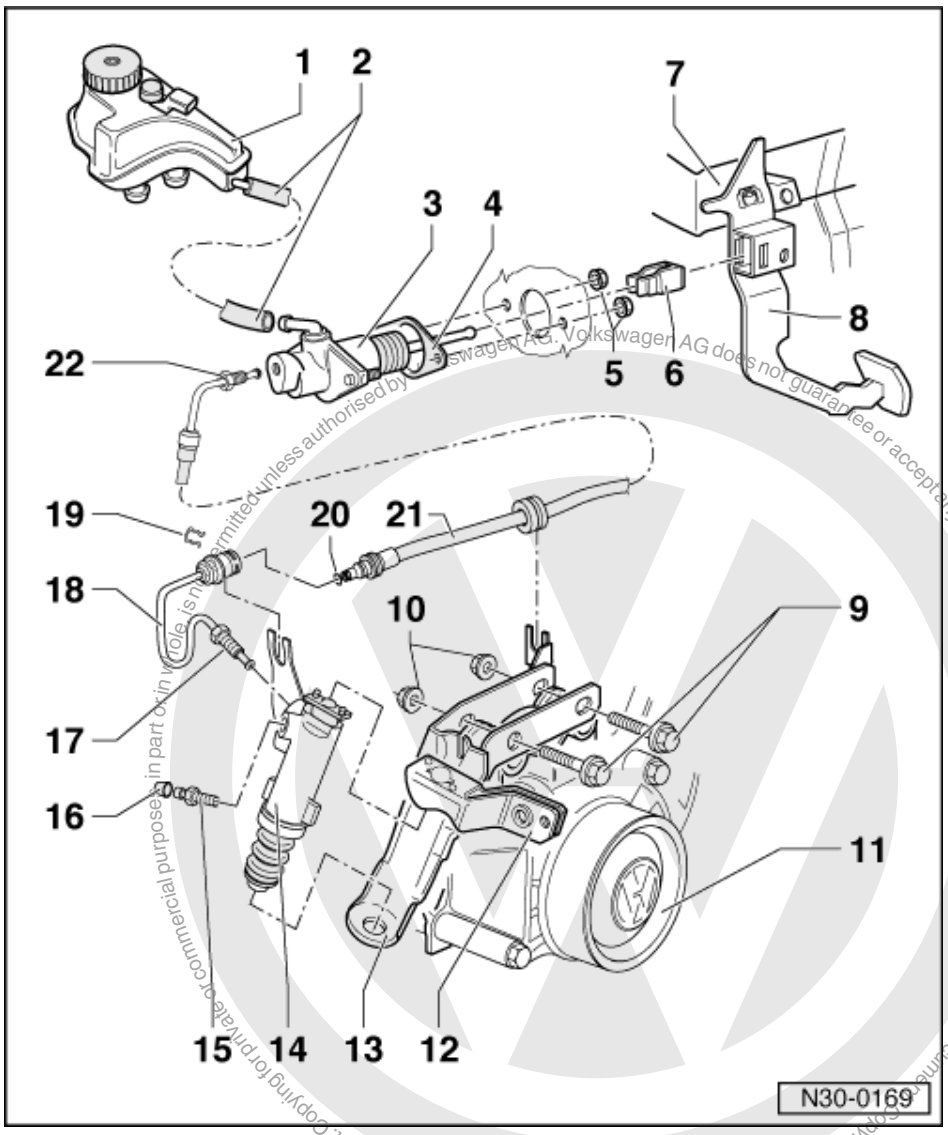

14 Slave cylinder

- Removing with gearbox installed => Page 78
- Before renewing, press together using a screwdriver and clamp hose/metal pipe (item 21) with hose clamp 3094. Then separate hose/metal pipe from pressure pipe (item 18).
- Bleeding => Page 41

15 Bleed valve

- Bleeding clutch system
  => Page 41

16 Dust cap

17 Pipe union, 20 Nm

18 Pressure pipe

satelettronica

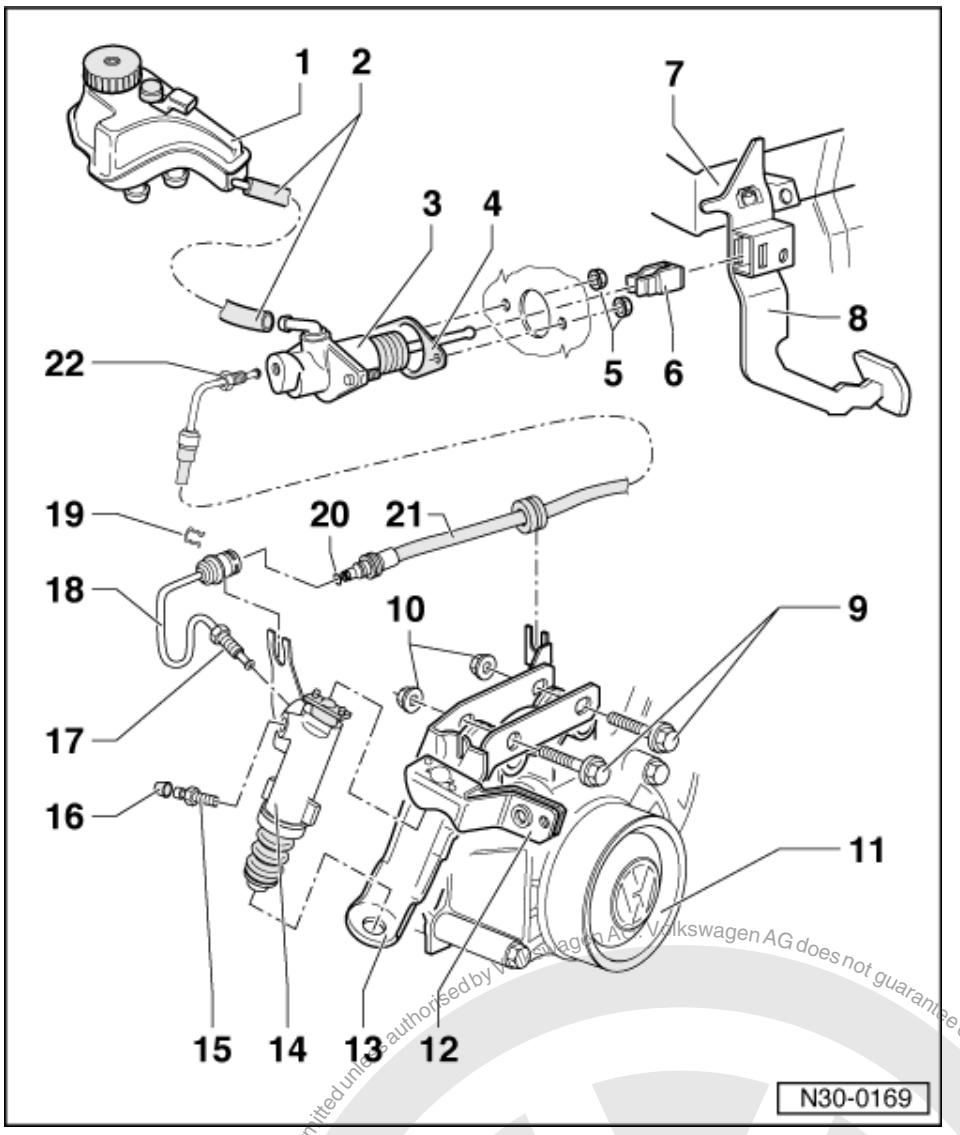

19 Clip
- Lever out with screwdriver

20 O-ring
- Always renew
- Insert with brake fluid
- Pull onto pipe/hose connection

21 Hose/metal pipe

22 Pipe union, 20 Nm

Protected by copyright. Copying for private or commercial purposes, in part or in whole, is not permitted unless authorised by Volkswagen AG. Volkswagen AG does not guarantee or accept any liability with respect to the correctness of information in this document. Copyright by Volkswagen AG.
satelettronica

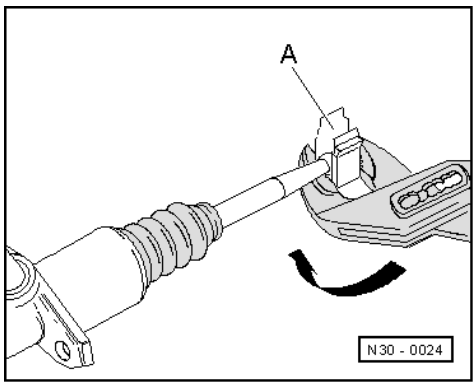

-> Fig.1 Lever retainer -A- off in direction of arrow

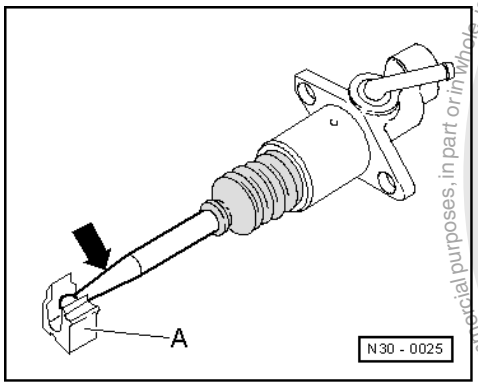

-> Fig.2 Press master cylinder operating rod in retainer -A- in direction of arrow

Protected by copyright. Copying for private or commercial purposes, in part or in whole, is not permitted unless authorised by Volkswagen AG. Volkswagen AG does not guarantee or accept any liability with respect to the correctness of information in this document. Copyright by Volkswagen AG.

satelettronica

1.11 - Removing and installing master cylinder

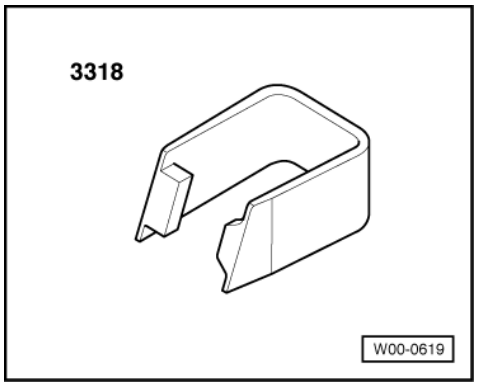

Special tools and workshop equipment required

- 3318 Release tool

Removing

- Remove coolant expansion tank and lay to one side.

Note:

Do not open cooling system.

- Pull supply hose off brake fluid reservoir and seal.
- Remove pipe from master cylinder and seal.

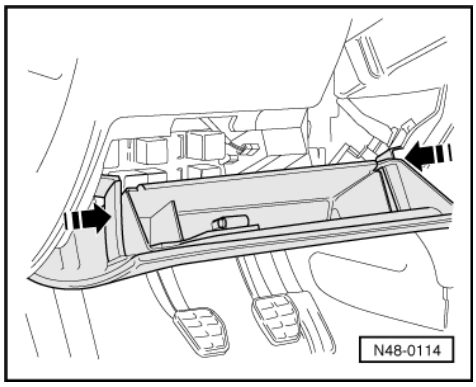

- Disconnect earth strap from battery

Note:

Note radio coding for vehicles with coded radio.

- -> Pull stowage compartment, below dash panel, out of mountings but first push stops in direction of arrow.

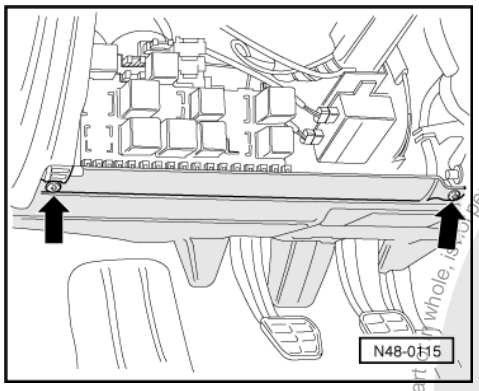

- -> Unbolt cover (arrows)
- Unhook relay plate from mountings, place carefully to side and support.

Note:

Do not pull connectors off relays and wiring.

Protected by copyright. Copying for private or commercial purposes, in part or in whole, is not permitted unless authorised by Volkswagen AG. Volkswagen AG does not guarantee or accept any liability with respect to the correctness of information in this document. Copyright by Volkswagen AG.
satelettronica

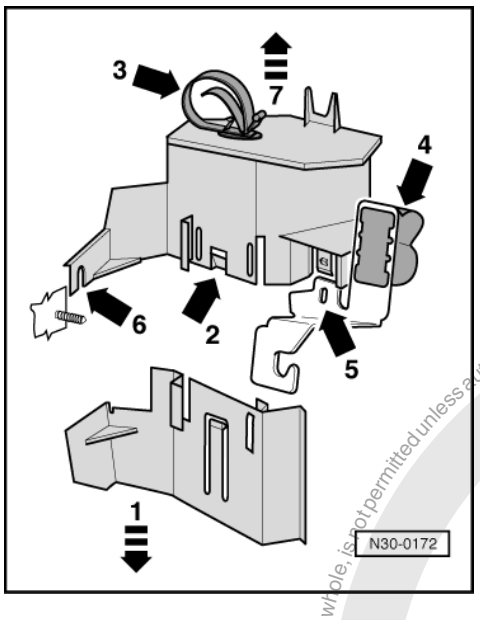

-> Remove clutch pedal cover (lower part) from mounting bracket as follows:

- Release lower part from upper part -arrow 2- and pull off lower part -arrow 1-.

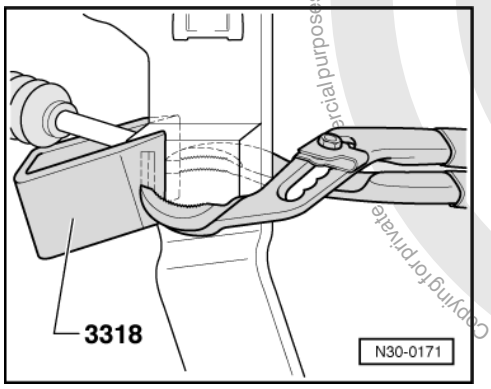

-> Separate master cylinder operating rod from clutch pedal as follows:

- Insert release tool 3318 in the cut-out in the clutch pedal. The inscription "top/oben" on the release tool faces towards dash panel.
- Press release tool together with pliers.
- Unbolt master cylinder from passenger compartment.

Installing

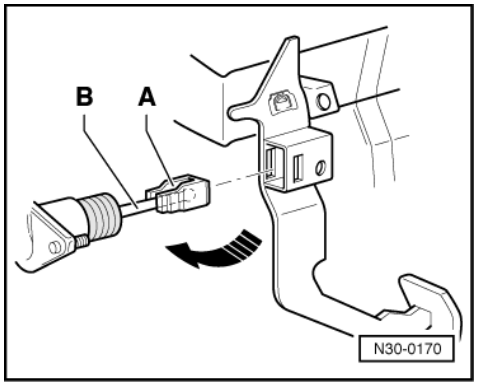

Protected by copyright. Copying for private or commercial purposes, in part or in whole, is not permitted unless authorised by Volkswagen AG. Volkswagen AG does not guarantee or accept any liability with respect to the correctness of information in this document. Copyright by Volkswagen AG.
satelettronica

Installation is carried out in the reverse sequence, when doing this note the following:

- -> The retainer -A- must be fitted to the master cylinder operating rod -B-.
- To engage press clutch pedal towards bulkhead (direction of arrow). Ensure correctly located.
- Bleeding clutch system after installing master cylinder=>Page 41 .

1.12 - Bleeding clutch system

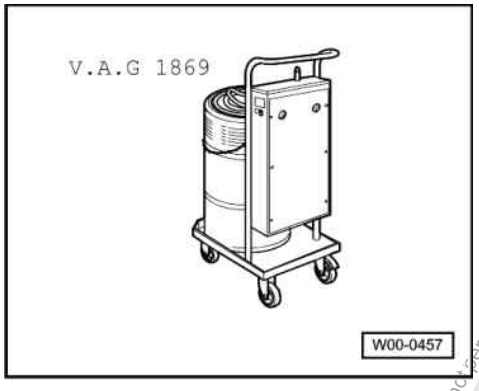

Special tools and workshop equipment required

- V.A.G. 1869 Brake filling and bleeding unit

- Brake fluid specifications.

=> Running gear; Repair group 47; Bleeding brake system, vehicles with and without ABS Bleeding brake system, vehicles with and without ABS

- Connect pressure hose to brake fluid reservoir.
- To bleed system use bleed hose V.A.G 1238/B 3 - 670 mm long, if necessary.

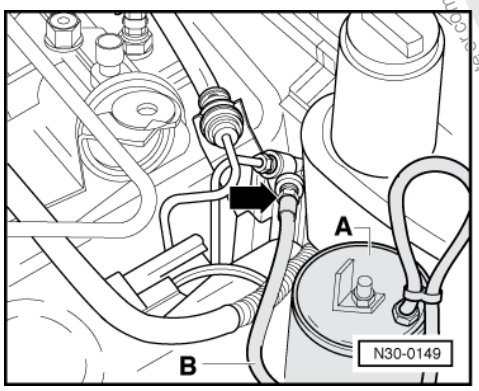

- -> Connect bleed hose -B- to collector bottle -A-.
- Connect bleed hose -B- to slave cylinder (arrow) and open bleed valve.
- Depress clutch pedal several times after completion of bleeding process.

Protected by copyright. Copying for private or commercial purposes, in part or in whole, is not permitted unless authorised by Volkswagen AG. Volkswagen AG does not guarantee or accept any liability with respect to the correctness of information in this document. Copyright by Volkswagen AG.
satelettronica

2 - Servicing clutch

2.1 - Servicing clutch

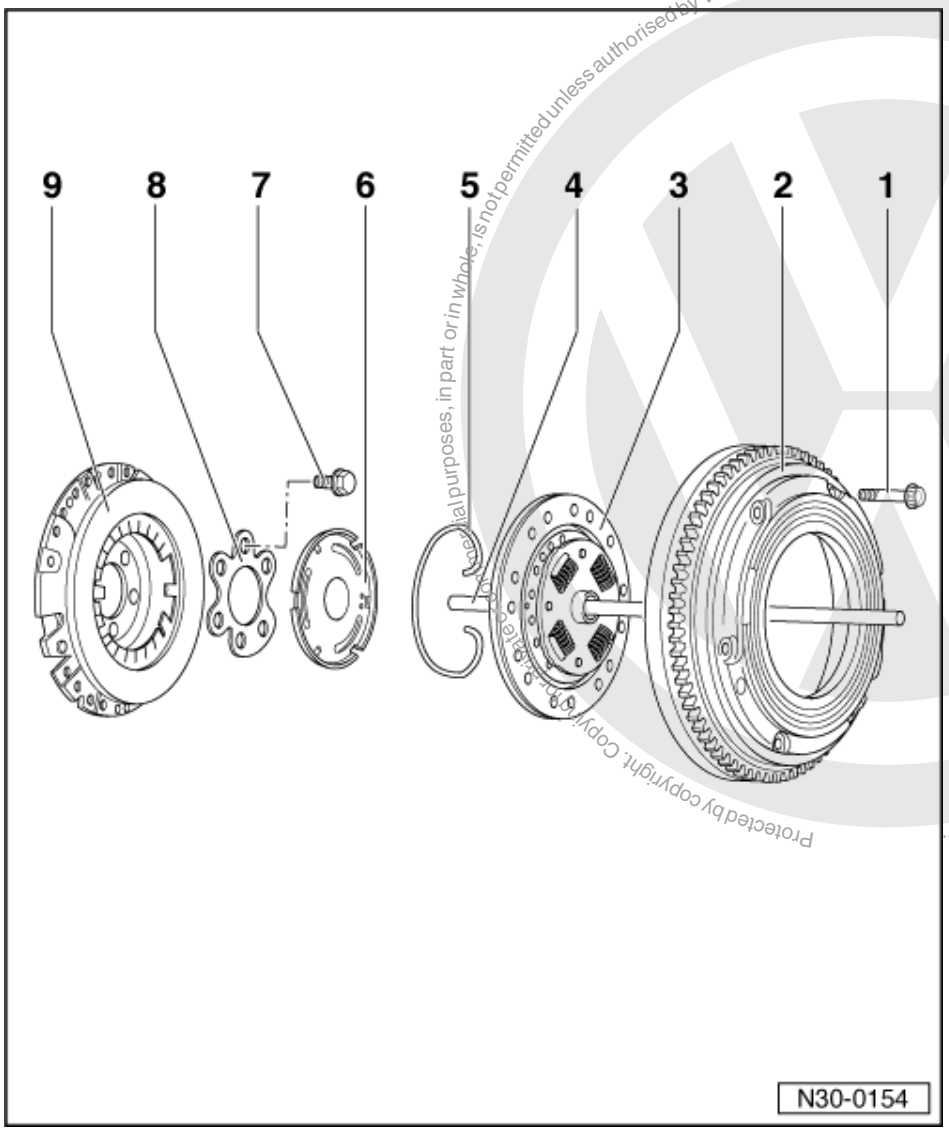

Protected by copyright. Copyright by Volkswagen AG. Volkswagen AG does not guarantee or accept any liability with respect to the correctness of information in this document. Copyright by Volkswagen AG. Reproduction for commercial purposes, in part or in whole, is not permitted unless authorised by Volkswagen AG.

satelettronica

(Gearbox removed)

Notes:

- Before replacing the clutch and pressure plate note fault finding transmission No.9 - Defects on the clutch and clutch mechanism
- Replace clutch plates and pressure plates with damaged or loose rivets
- Select correct clutch plate and pressure plate according to parts list and engine code.
- Assemble clutch so that the flywheel centralizing pin grips in the pressure plate centralizing hole or centralizing slot. Otherwise TDC on flywheel is not correct.

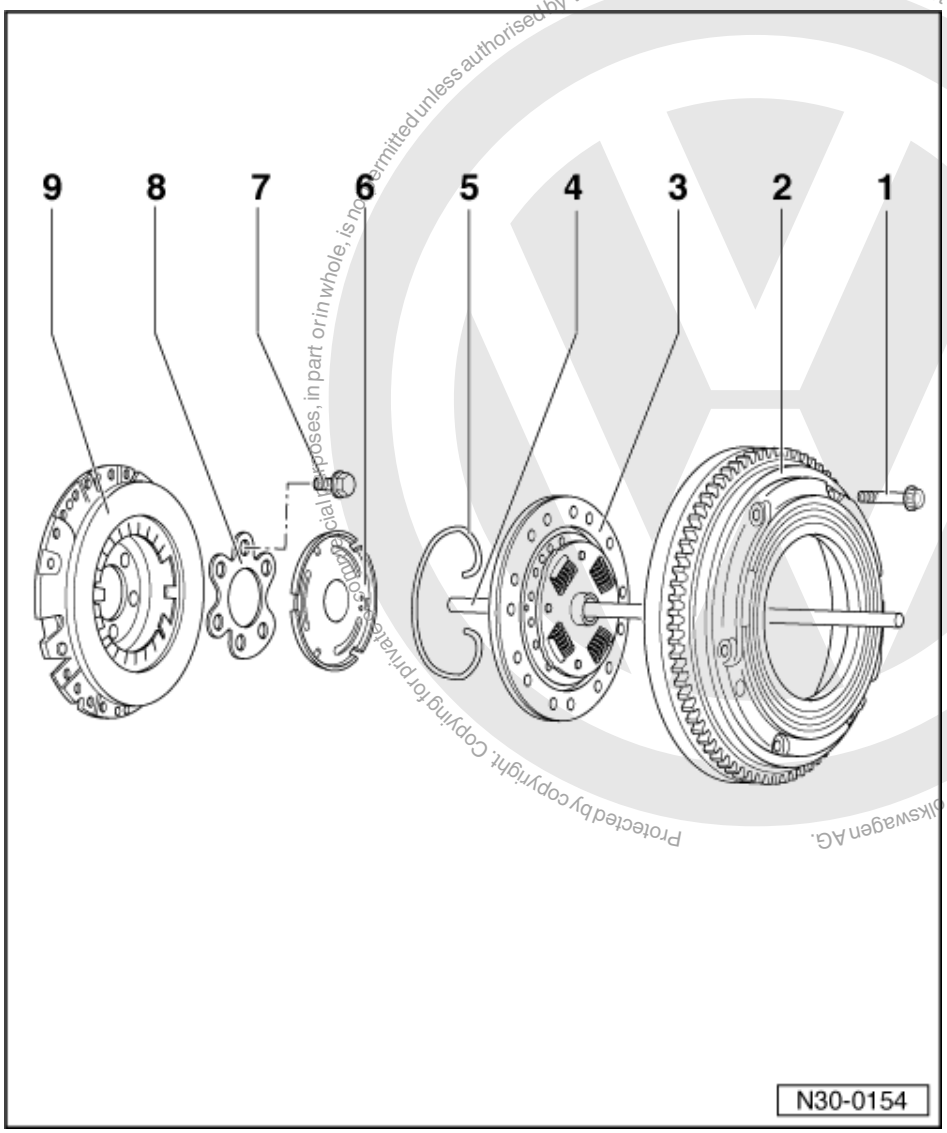

1 Twelve point bolt, 20 Nm
- Loosen and tighten gradually and diagonally

2 Flywheel
- Removing and installing

=> Engine, Mechanics; Repair group 13

- Ensure centring pins are a tight fit
- Contact surface for clutch lining must be free of grooves, oil and grease
- TDC sender insertion depth must be adapted to suit the sizes of the various flywheels. For this reason there are two different coloured sealing bolts in the clutch housing. Allocation => Page 134 .

3 Clutch plate
- Centring => Page 47
- Diameter
  =>from page 2

satelettronica

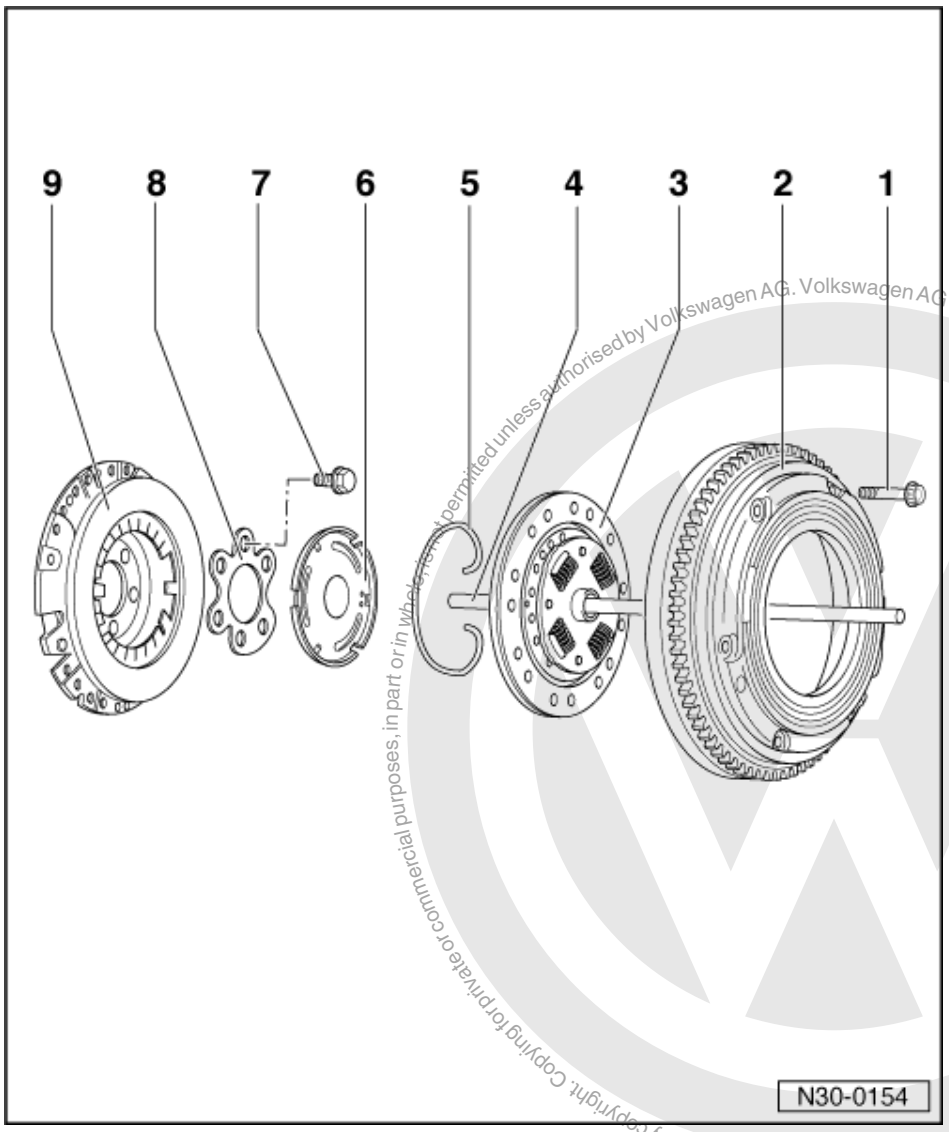

Protected by copyright. Copying for private or commercial purposes, in part or in whole, is not permitted unless authorised by Volkswagen AG. Volkswagen AG does not guarantee or accept any liability with respect to the correctness of information in this document. Copyright by Volkswagen AG.

satelettronica

4 Clutch push rod
- Grease area of input shaft guide sleeve

5 Retaining ring

6 Pressure plate
- Coat contact surface and clutch push rod mounting with a very thin coating of G 000 100 grease

7 Pressure plate to crankshaft securing bolt
- Removing and installing

=> Engine, Mechanics; Repair group 13

8 Intermediate plate
- Installation position => Page 46

9 Pressure plate
- Removing and installing => Fig. V30-0384, Page 46
- Maximum pressure plate distortion, inside 0.2 mm
- Renew pressure plate with damaged or loose rivet connections

2.2 - Removing and installing clutch

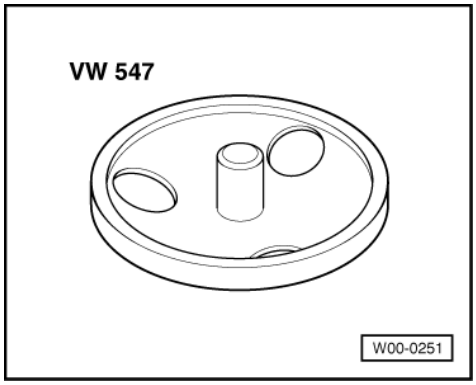

Special tools and workshop equipment required

- VW 547 Clutch centring plate

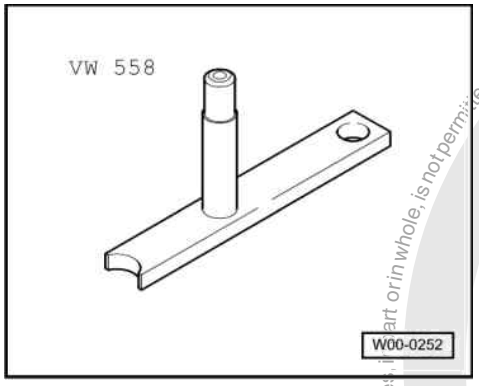

- VW 558 Counter hold tool

Removing

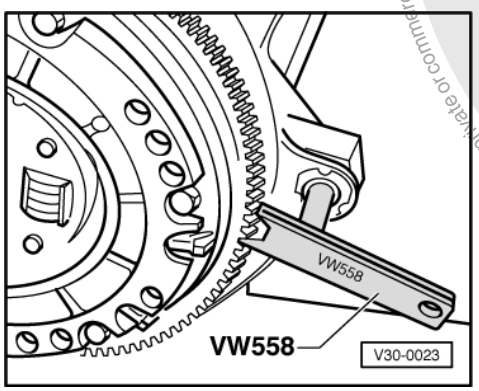

- -> Remove flywheel, do this by arresting with counter hold VW 558.
- Take off clutch plate.

Protected by copyright. Copying for private or commercial purposes, in part or in whole, is not permitted unless authorised by Volkswagen AG. Volkswagen AG does not guarantee or accept any liability with respect to the correctness of information in this document. Copyright by Volkswagen AG.
satelettronica

Protected by copyright. Copying for private or commercial purposes, in part or in whole, is not permitted unless authorised by Volkswagen AG. Volkswagen AG does not guarantee or accept any liability with respect to the correctness of information in this document. Copyright by Volkswagen AG.

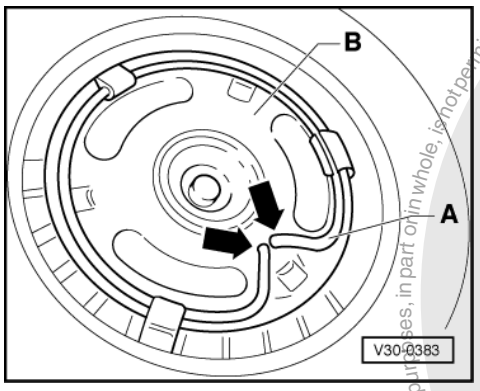

- -> Lever retaining clip -A- for release plate -B- out of holes (arrows) with a screwdriver and remove.
- Remove release plate -B-.

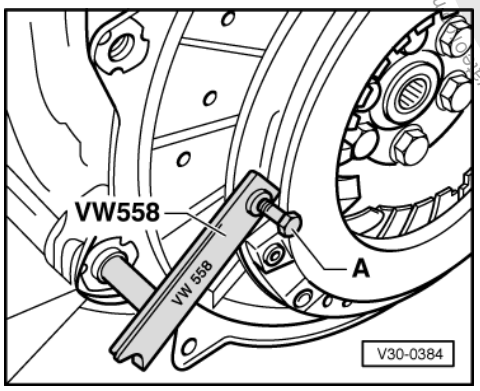

- -> Unbolt pressure plate, to do this lock counter hold tool VW 558 on pressure plate with bolt -A-.
- Take off pressure plate and intermediate plate.

Installing

- Fit pressure plate.
- Fit intermediate plate.

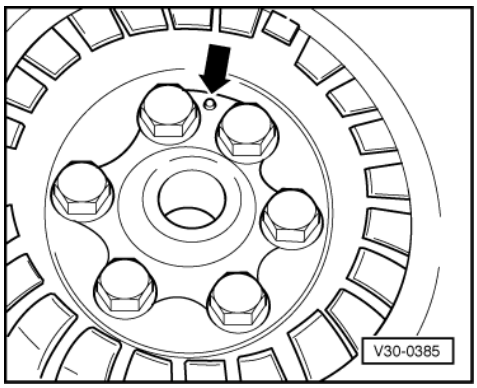

- -> Intermediate plate installation position: raised portion (arrow) points away from pressure plate.
- Insert new securing bolts.
- Tighten securing bolts, do this by locking pressure plate with counter hold VW 558 as for removing. Securing bolt tightening torque.

=> Engine, Mechanics; Repair group 13

satelettronica

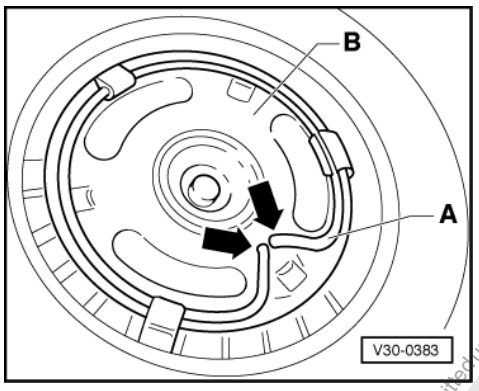

- -> Fit release plate -B- and secure to pressure plate with retaining clip -A-. Insert wire ends into holes (arrows) in pressure plate.
- Coat clutch plate splines with a very thin film of G 000 100 grease. Then slide clutch plate back and forth on gearbox input shaft until the hub slides on shaft easily. Excessive grease must be removed.
- Fit clutch plate with flywheel to pressure plate.

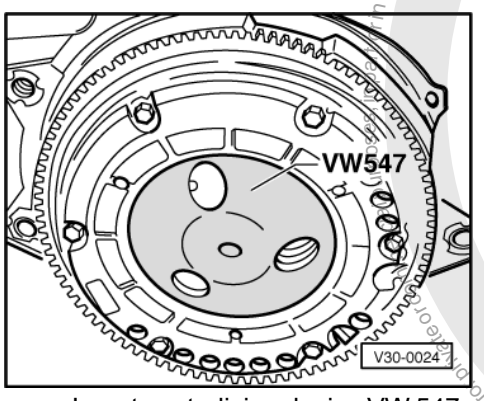

- -> Insert centralizing device VW 547 and tighten flywheel bolts alternately and diagonally. Tightening torque: 20 Nm.

Vehicles with 2.0 ltr. engine =>Page 47

Vehicles with 2.0 ltr. engine:

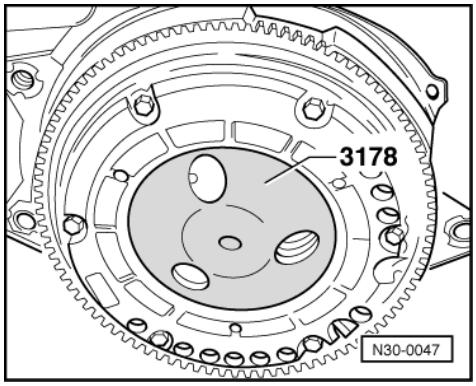

- -> Insert centralizing device 3178 and tighten flywheel securing bolts alternately and diagonally.
- Arrest flywheel to tighten securing bolts as for removal with counter hold VW 558.

Protected by copyright. Copyright by Volkswagen AG.
Copyright by Volkswagen AG. Volkswagen AG does not guarantee or accept any liability with respect to the correctness of information in this document. Copying for private or commercial purposes, in whole or in part, is not permitted unless authorised by Volkswagen AG.
satelettronica

34 - Controls, Housing

1 - Servicing gear selector mechanism

1.1 - Servicing gear selector mechanism

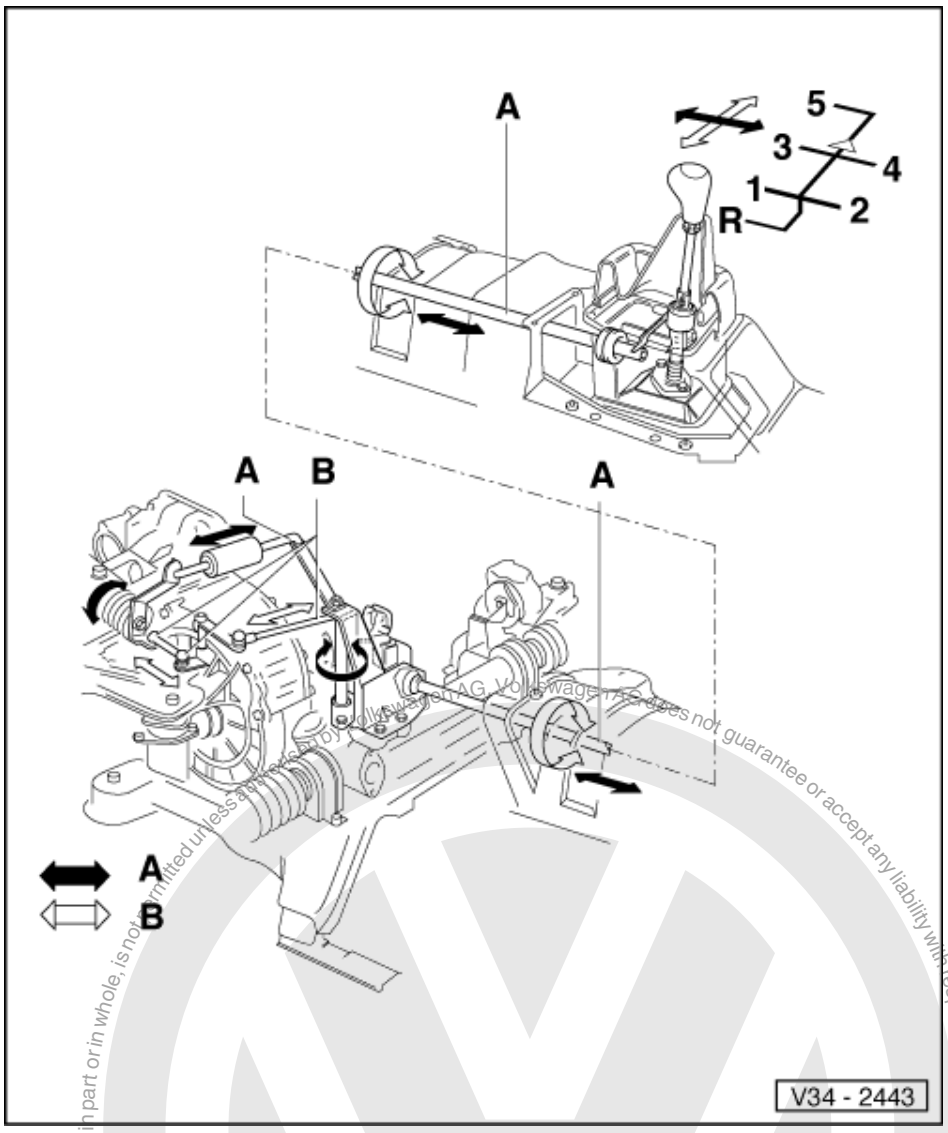

1.2 - Installation position of gear selector mechanism

A - Gear selector rod movement
B - Gate selector rod

Double headed arrow -A- Gear selection movement

Double headed arrow -B- Gate selection movement

Protected by copyright. Copying for private or commercial purposes, in part or in whole, is not permitted unless authorised by Volkswagen AG. Volkswagen AG does not guarantee or accept any liability with respect to the correctness of information in this document. Copyright by Volkswagen AG.

satelettronica

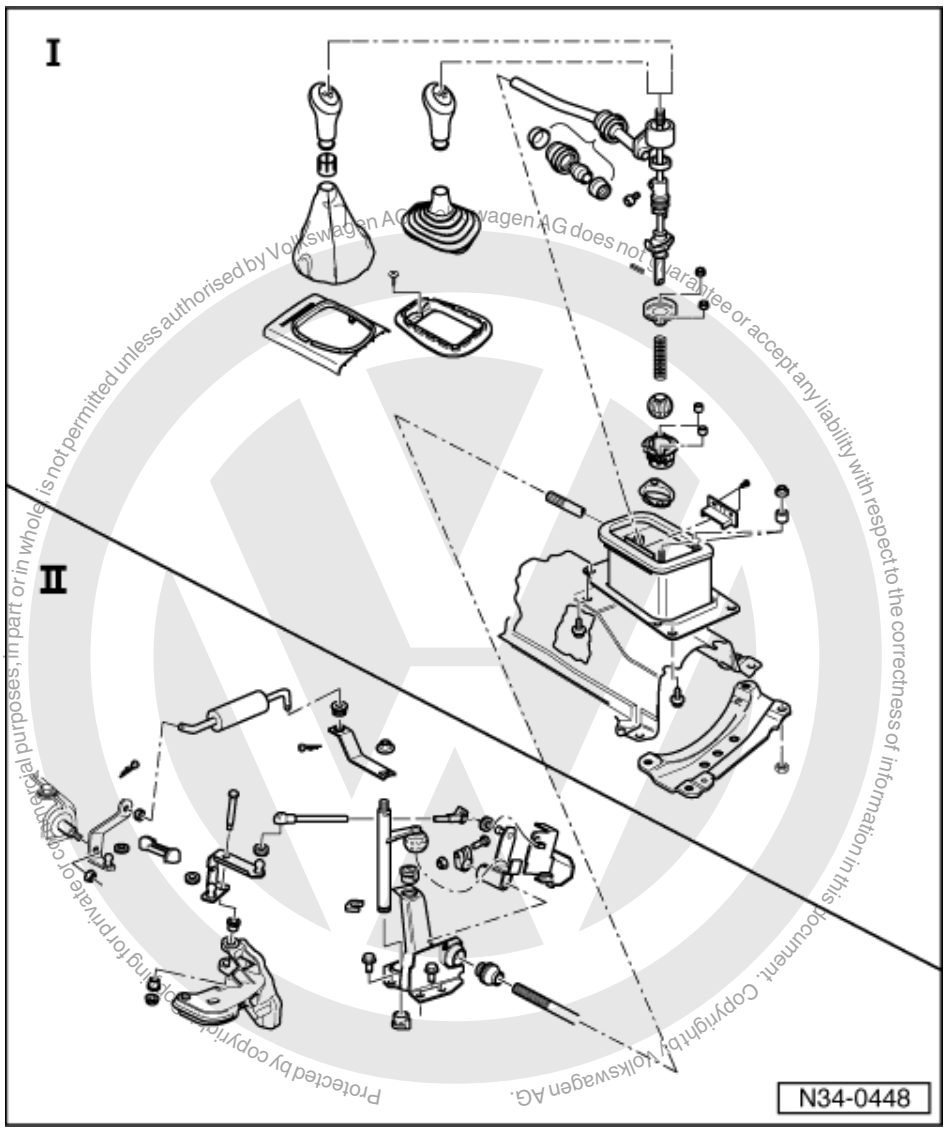

Protected by copyright. Copying for private or commercial purposes, in part or in whole, is not permitted unless authorised by Volkswagen AG. Volkswagen AG does not guarantee or accept any liability with respect to the correctness of information in this document. Copyright by Volkswagen AG.

I - Assembly overview - Gear stick housing/gear stick => Page 50
II - Assembly overview - Selector mechanism relay points on gearbox => Page 58

Removing and installing selector mechanism => Page 63

Adjusting selector mechanism => Page 65

Notes:

- Before working on the selector mechanism, disconnect earth strap from the battery in the engine compartment.
- Note radio code on vehicles with coded radio.
- Lubricate all bearings and contact surfaces with poly resin grease part No. G 052 142 A2.

satelettronica

1.3 - Assembly overview - Gearstick housing/gearstick

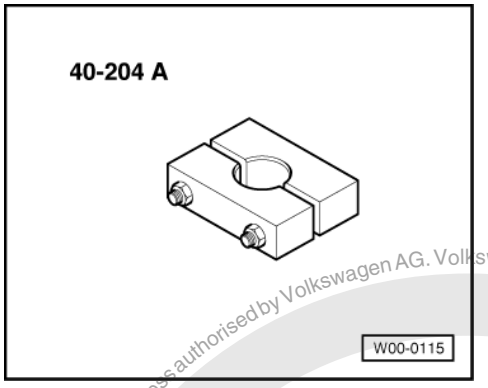

Special tools and workshop equipment required

- 40-204 A Spanner

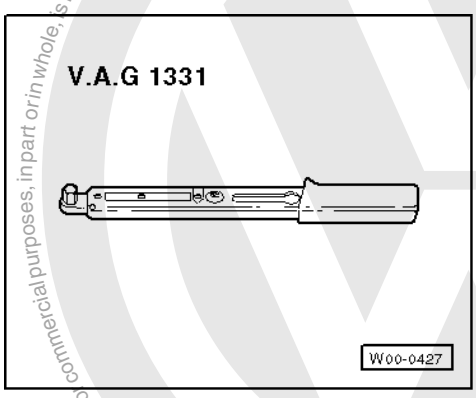

- V.A.G 1331 Torque wrench

Protected by copyright. Copying for private or commercial purposes, in part or in whole, is not permitted unless authorised by Volkswagen AG. Volkswagen AG does not guarantee or accept any liability with respect to the correctness of information in this document. Copyright by Volkswagen AG.
satelettronica

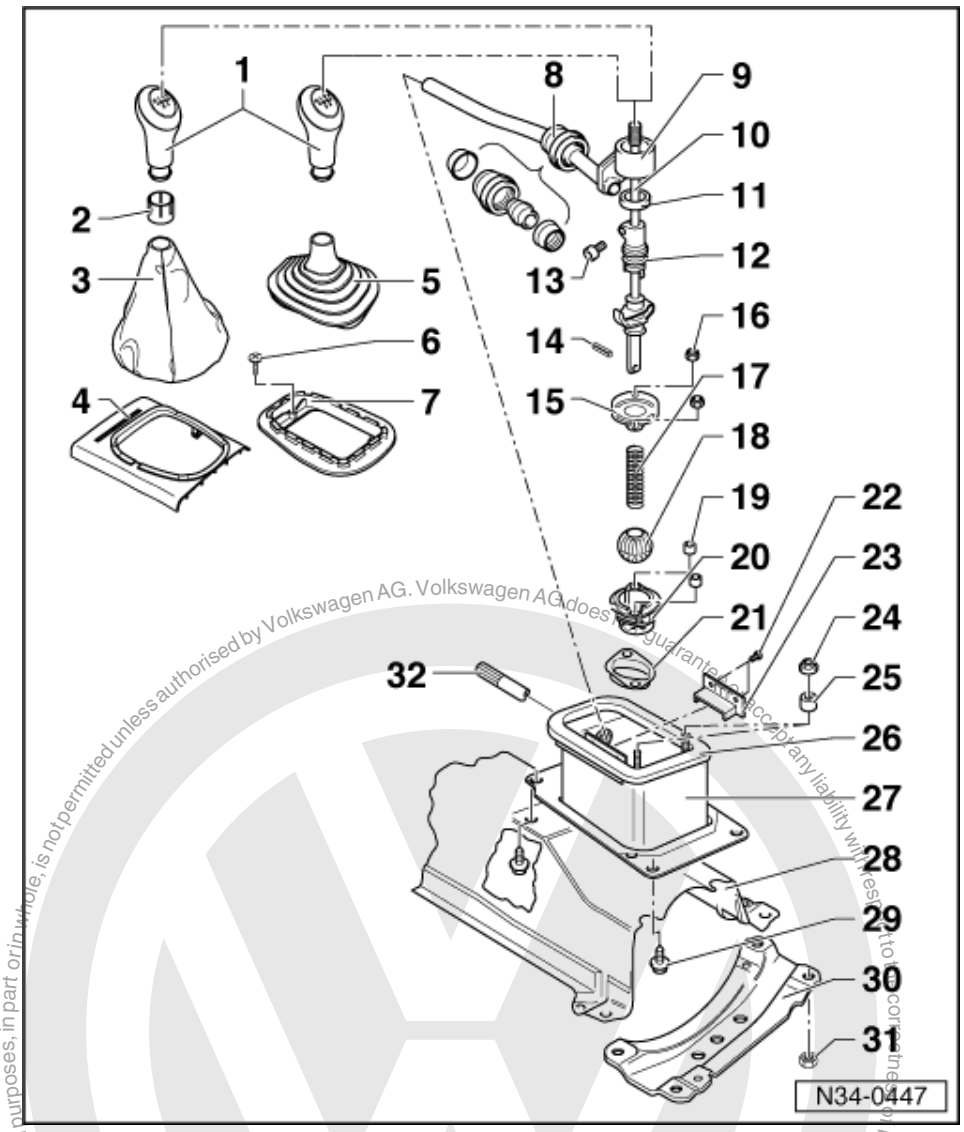

Note:

Lubricate all mountings and sliding surfaces with Polyurea grease Part No. G 052 142 A2.

1 Gear stick knob
- Allocate using parts catalogue

2 Sleeve

3 Leatherette gaiter
- Pull off from frame
- Connect to gear stick knob before installing =>Page 57

4 Frame
- Pull off centre console upwards

5 Rubber cover
- Connect to gear stick knob before installing =>Page 57

satelettronica

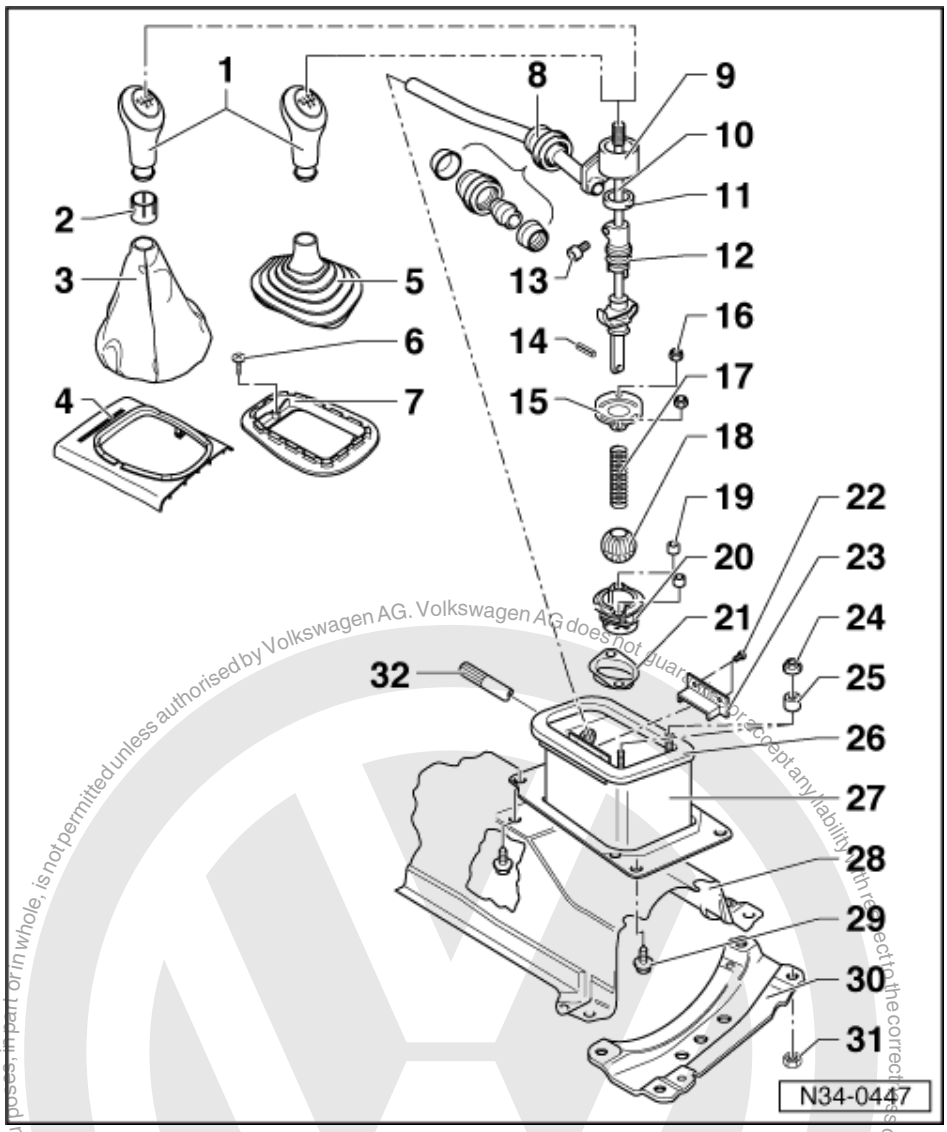

6 Bolt

7 Frame

8 Selector rod bearing

- When installing ensure that both plastic half cups are not pressed apart

9 Selector rod

- Pull with gear stick out of gear stick housing => Fig. 3
- After installing, adjust gear selector mechanism => Page 65

10 Gear stick

- Before removing, remove eccentric adjuster => Fig. 2
- Assemble before installing:
  Push on retaining plate (item 15), spring (item 17) and ball (item 18) and secure with spring pin (item 14) =>Fig. 4

satelettronica

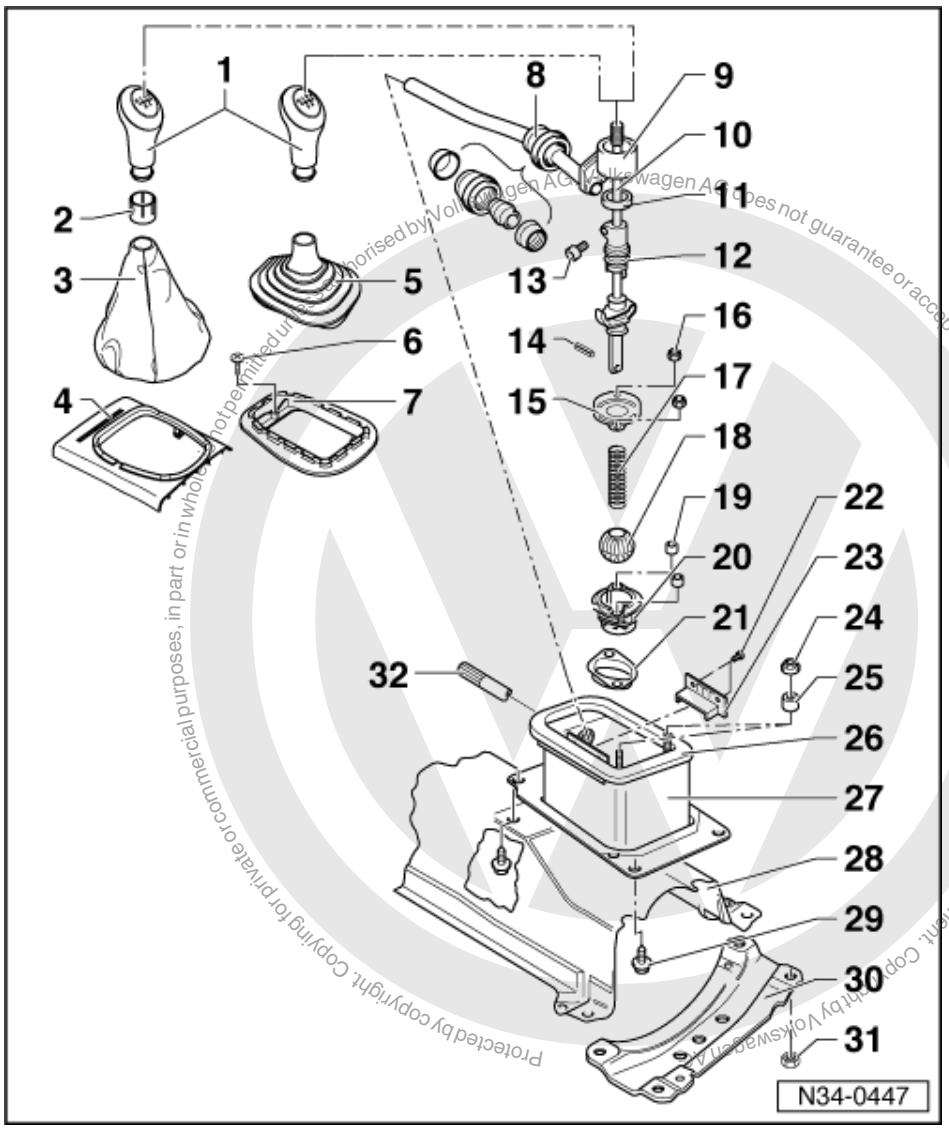

11 Synthetic ring
- Fit to eccentric adjuster

12 Eccentric adjuster
- Engage in gear stick after installing gear stick
- Removing => Fig. 2

13 Bolt, 2 Nm

14 Spring pin
- Removing and installing =>Fig. 4

15 Retaining plate
- Installation position => Fig. 1

16 Self-locking hexagon nut, 10 Nm
- Always renew

17 Spring

18 Ball

19 Spacer sleeve

20 Ball housing

satelettronica

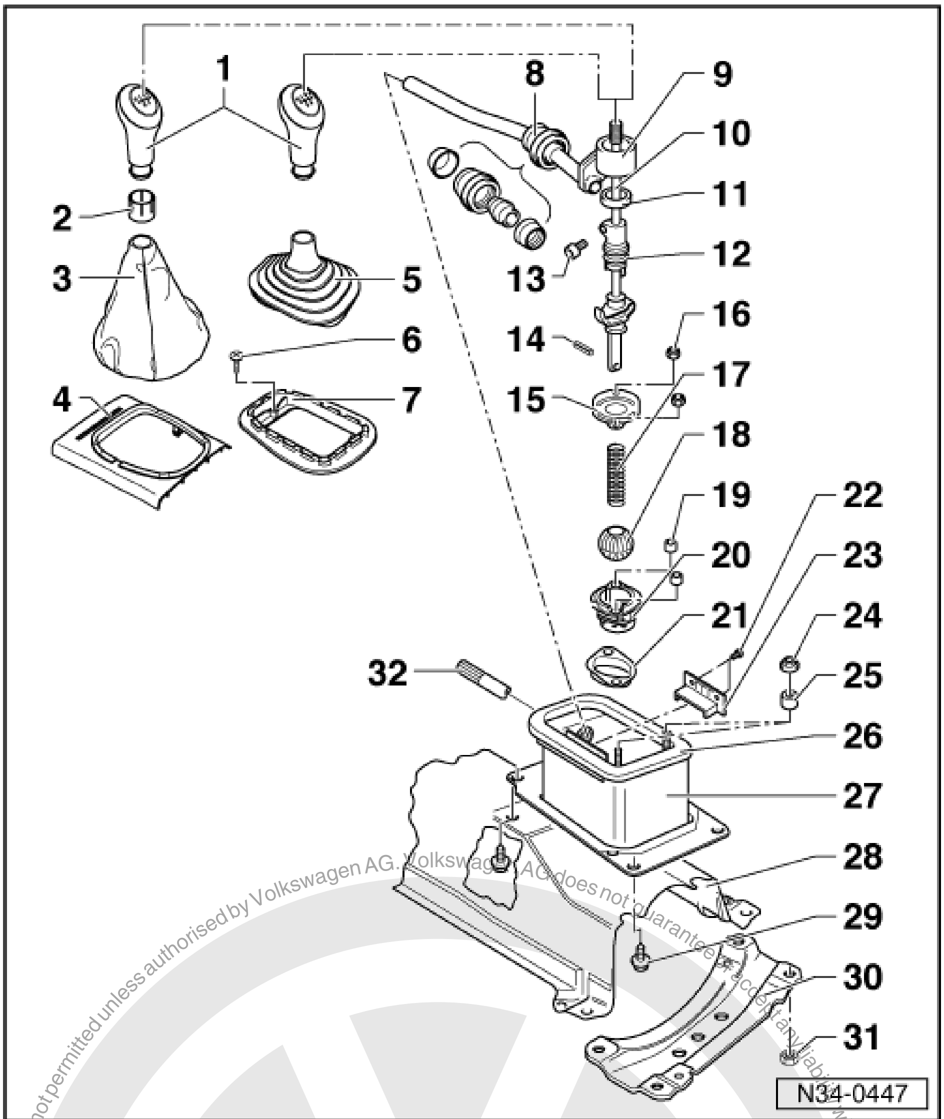

21 Gasket
- For ball housing

22 Rivet
- To secure stop

23 Stop

24 Plastic nut
- For console/frame (item 7) on gearstick housing
- Unscrew before removing gearstick housing

25 Spacer sleeve
- Between console and gear stick housing

26 Gasket
- Bond to gear stick housing

27 Gear stick housing
- Removing and installing => Page 63

Protected by copyright. Copying for private or commercial purposes, in part or in whole, is not permitted unless authorised by Volkswagen AG. Volkswagen AG does not guarantee or accept any liability with respect to the correctness of information in this document. Copyright by Volkswagen AG.

sateletronica

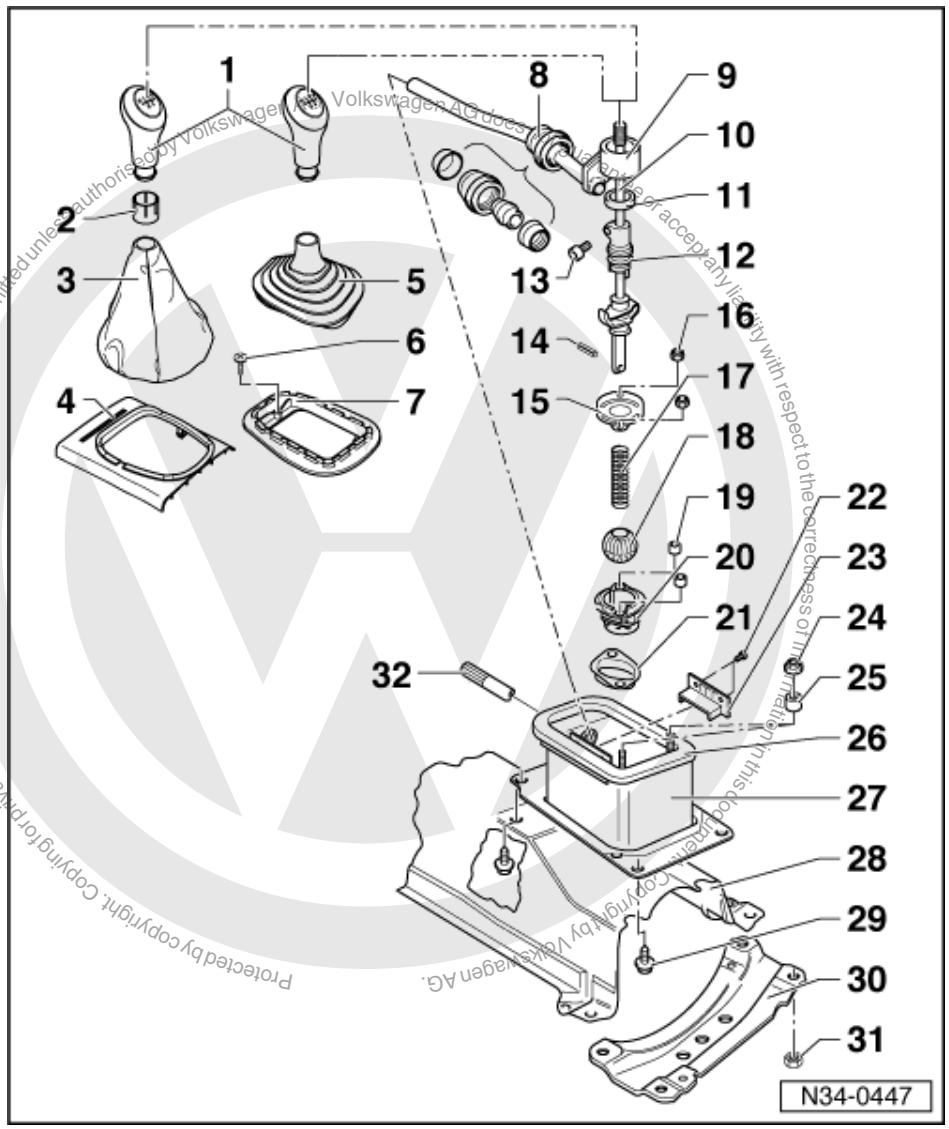

28 Heat shield
- Front and rear

29 Hexagon bolt, 20 Nm
- Gear stick housing to body

30 Cross member

31 Self-locking hexagon nut, 15 Nm

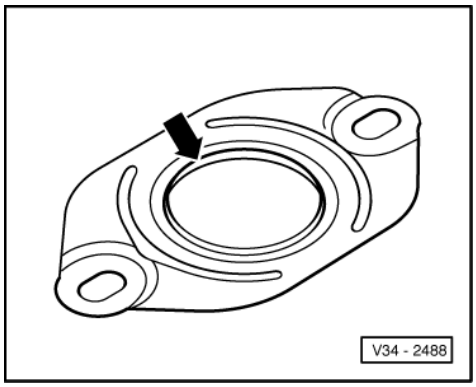

Protected by copyright. Copying for private or commercial purposes, in part or in whole, is not permitted unless authorised by Volkswagen AG. Volkswagen AG does not guarantee or accept any liability with respect to the correctness of information in this document. Copyright by Volkswagen AG.

satelettronica

-> Fig.1 Retaining plate installation position

The circumferential shoulder (arrow) is located opposite ball (item 53 .

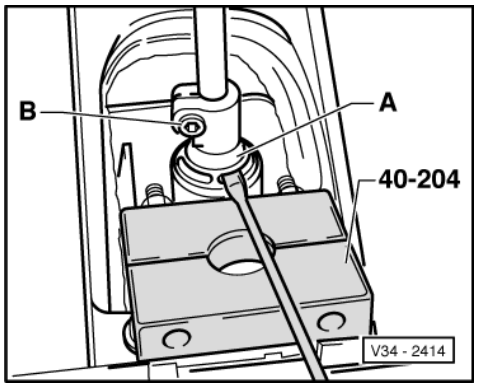

-> Fig.2 Removing eccentric adjuster

- Loosen bolt -B- and lever eccentric adjuster -A- carefully off lower part.

  Use e.g. special tool 40-204 A as a support.

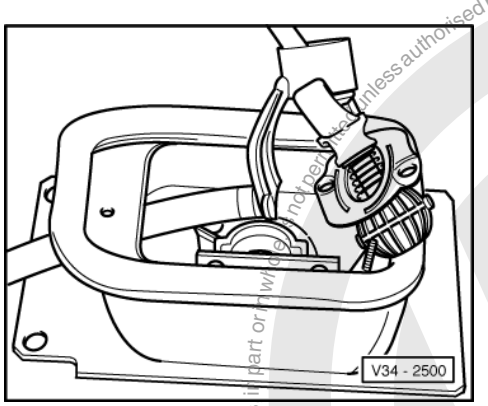

-> Fig.3 Pulling gear selector rod with gear stick lever out from gear stick housing

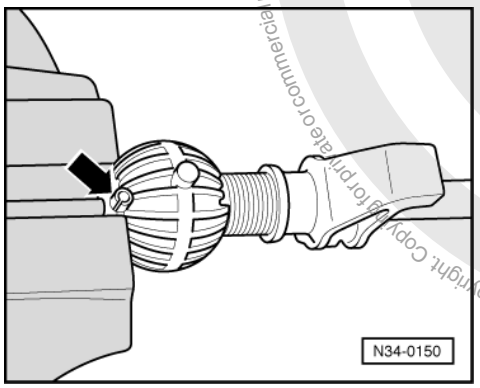

-> Fig.4 Removing and installing spring pin

- Tension gear stick in a vice as shown.
- Drive spring pin (arrow) in and out with drift.

Protected by copyright. Copying for private or commercial purposes, in part or in whole, is not permitted unless authorised by Volkswagen AG. Volkswagen AG does not guarantee or accept any liability with respect to the correctness of information in this document. Copyright by Volkswagen AG.
satelettronica

1.4 - Installing gear stick gaiter to gear stick knob

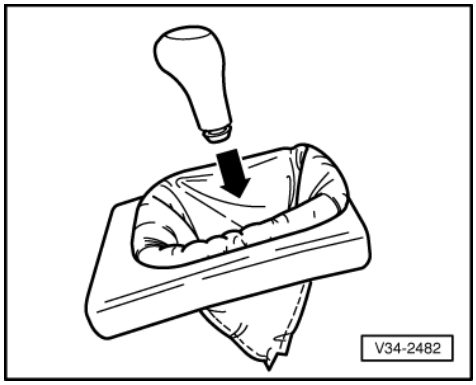

◆ Rubber boot

- Engage with gear stick knob

◆ Leatherette gaiter

- Turn cover inside out.
- -> Insert gear stick knob in gaiter (arrow).

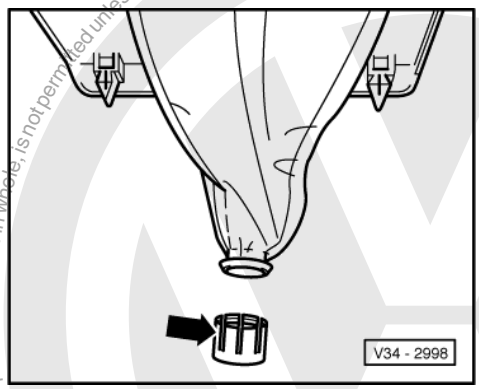

- -> Secure gaiter on gear stick knob with sleeve (arrow).
  Install gear stick knob and cover together.

Protected by copyright. Copying for private or commercial purposes, in part or in whole, is not permitted unless authorised by Volkswagen AG. Volkswagen AG does not guarantee or accept any liability with respect to the correctness of information in this document. Copyright by Volkswagen AG.
satelettronica

1.5 - Assembly overview - gear selector relay points at gearbox

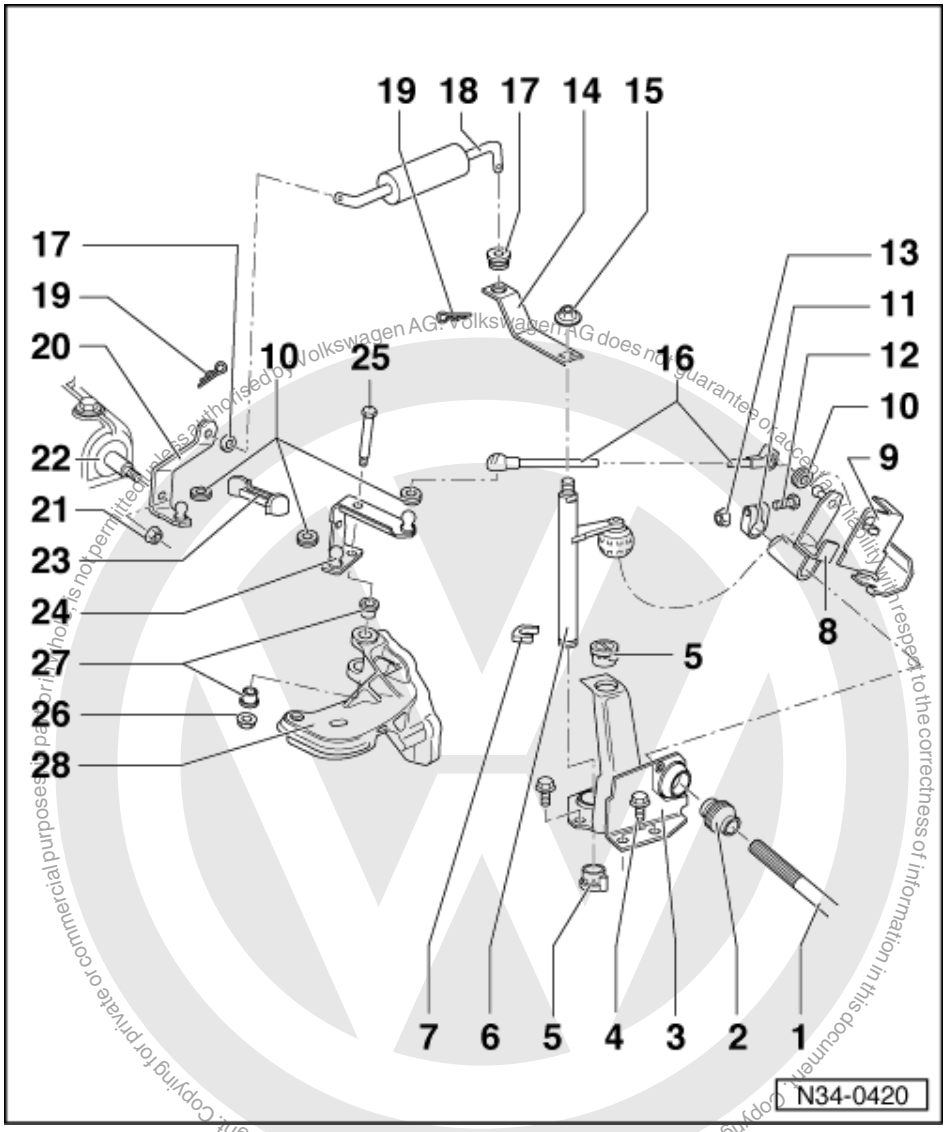

1 Selector rod
- Pull out from gear stick housing => Fig. 1

2 Mounting bush
3 Mounting bracket
- For relay shaft and selector rod mounting

4 Hexagon bolt, 25 Nm
- Mounting bracket to steering box

5 Mounting bush
6 Relay shaft
7 Circlip
8 Gate lever

satelettronica

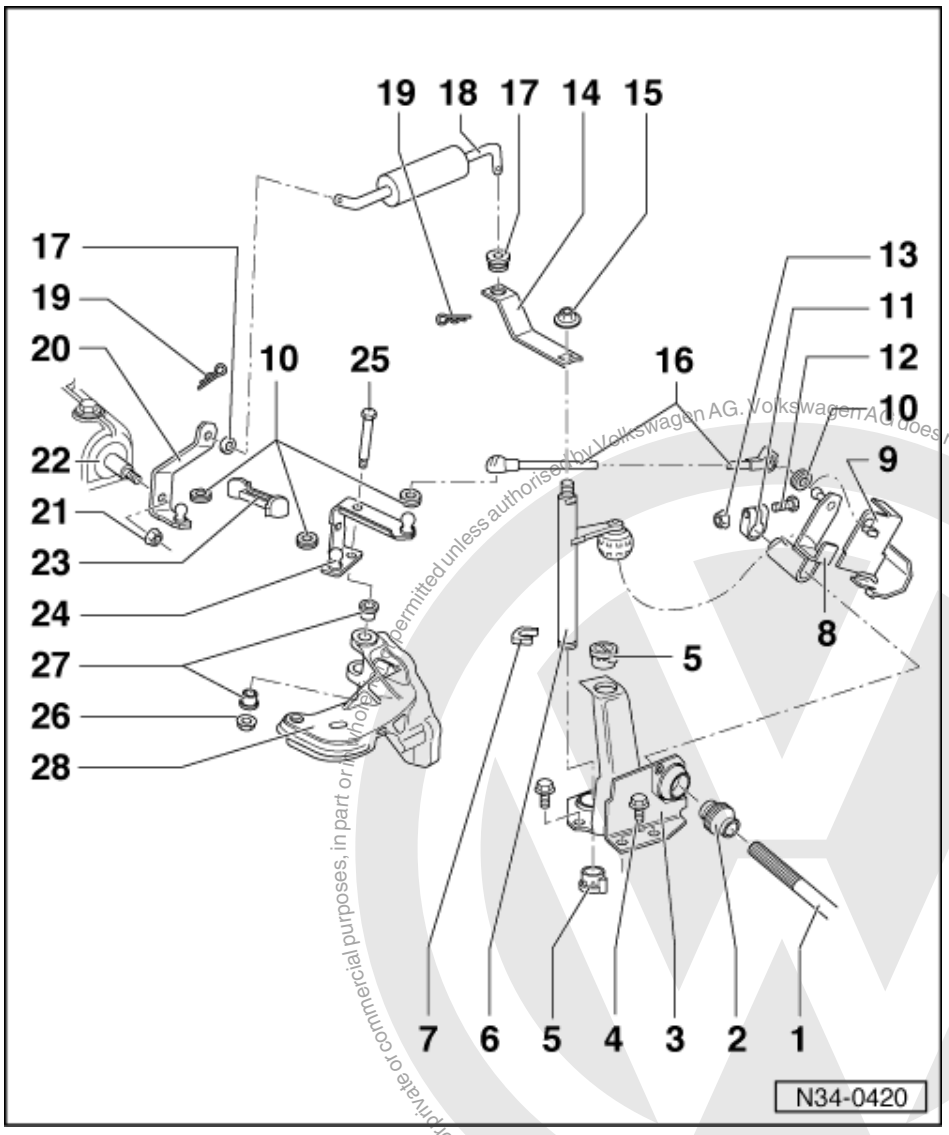

9 Heat shield
- Installation position => Fig. 2

10 Oil seal

11 Clamp

12 Bolt
- Clamp to selector rod

13 Self-locking hexagon nut, 20 Nm
- Clamp to selector rod

14 Intermediate lever

15 Self-locking hexagon nut, 20 Nm
- Intermediate lever to relay shaft

Protected by copyright. Copying for private or commercial purposes, in part or in whole, is not permitted unless authorised by Volkswagen AG. Volkswagen AG does not guarantee or accept any liability with respect to the correctness of information in this document. Copyright by Volkswagen AG.
satelettronica

Protected by copyright. Copying for private or commercial purposes, in part or in whole, is not permitted unless authorised by Volkswagen AG. Volkswagen AG does not guarantee or accept any liability with respect to the correctness of information in this document. Copyright by Volkswagen AG.

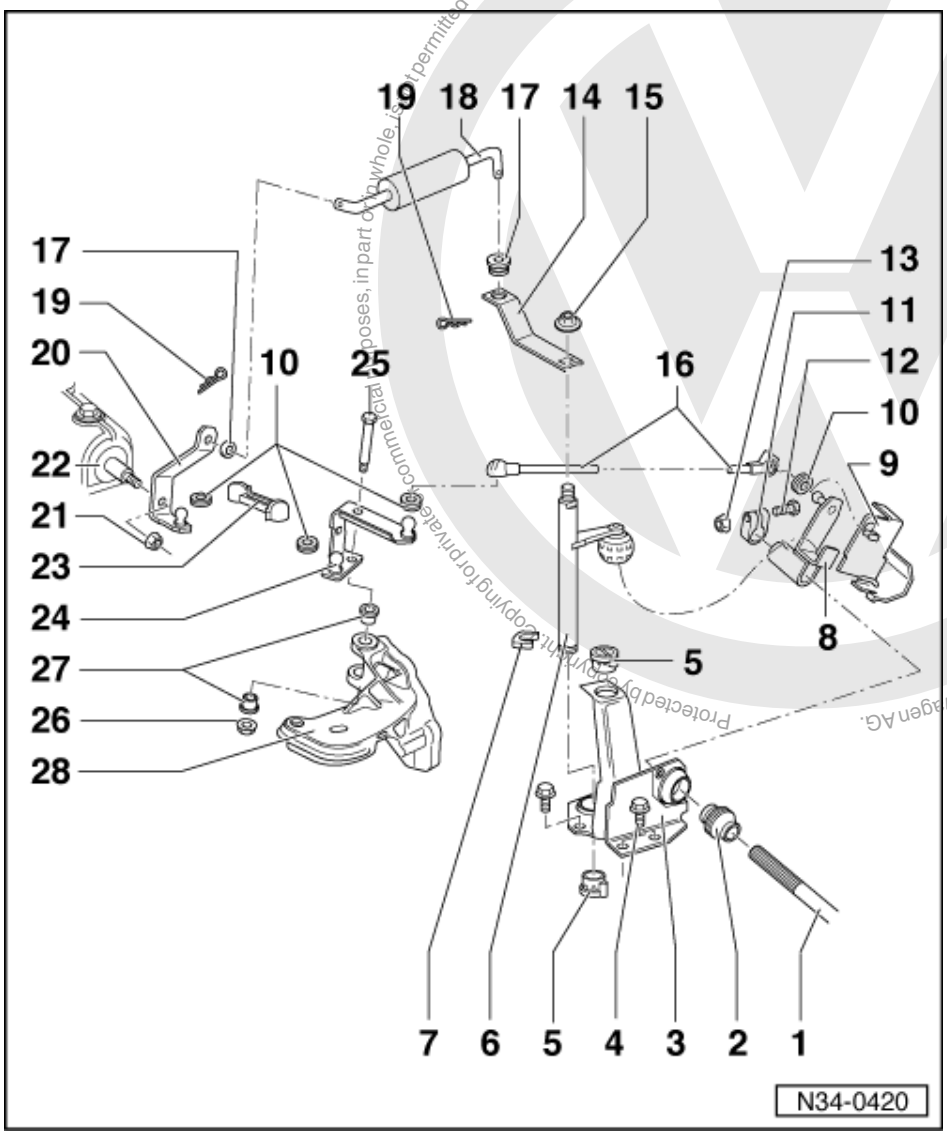

16 Gate selector rod, long
- Before removing, press synthetic head clamping piece back with a screwdriver

17 Mounting bush

18 Gear selector rod, front
- Removing and installing
  => Fig. 3
- Rework if causing complaints => Fig. 4

19 Securing spring
- Only on gear selector rods with holes, installing => Fig. 4

20 Gear stick
- Fits onto selector shaft in one position only.

21 Self-locking hexagon nut, 25 Nm
- Selector lever to gearbox

satelettronica

Protected by copyright. Copying for private or commercial purposes, in part or in whole, is not permitted unless authorised by Volkswagen AG. Volkswagen AG does not guarantee or accept any liability with respect to the correctness of information in this document. Copyright by Volkswagen AG.

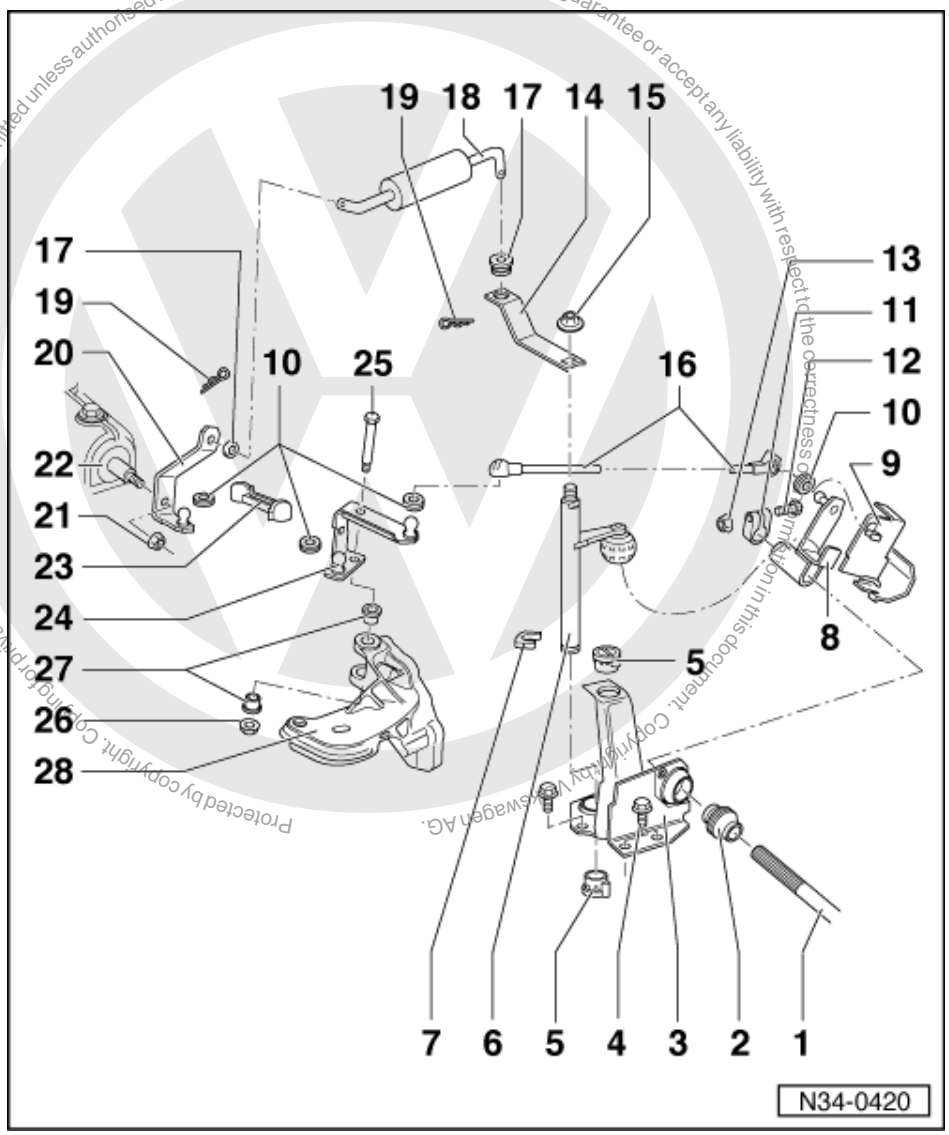

22 Selector shaft
23 Gate selector rod, short
24 Relay lever
25 Hexagon bolt
- Relay lever to console

26 Self-locking hexagon nut, 15 Nm
- Relay lever to console

27 Mounting bush
28 Gearbox console
- Need not be removed when removing relay lever

satelettronica

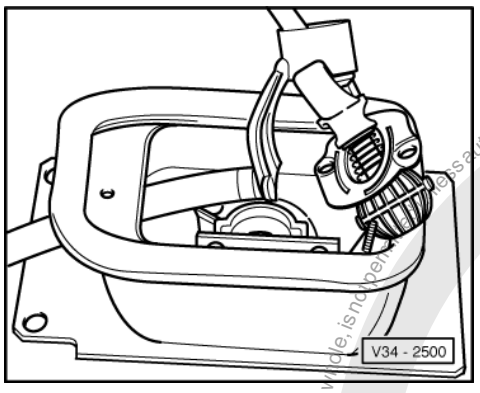

-> Fig.1 Pulling gear selector rod with gear stick lever out from gear stick housing

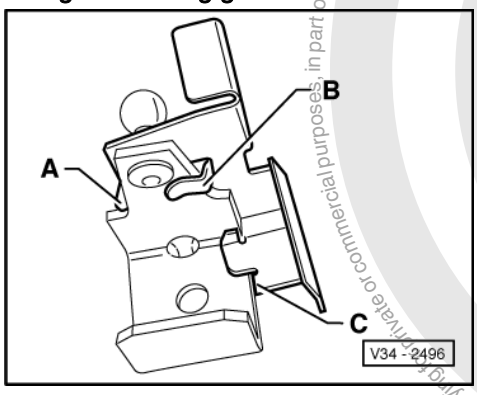

-> Fig.2 Heat shield installation position

The clips -A- and -B- encompass the gate selector lever.
Area -C- then lies on gate selector lever.

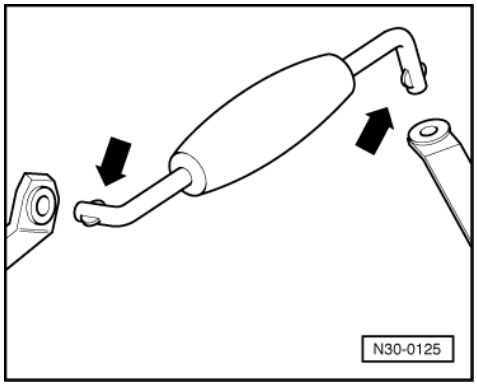

-> Fig.3 Removing and installing selector rod with retaining lugs (arrows)

- Press out of bush with water pump pliers and push in by hand.

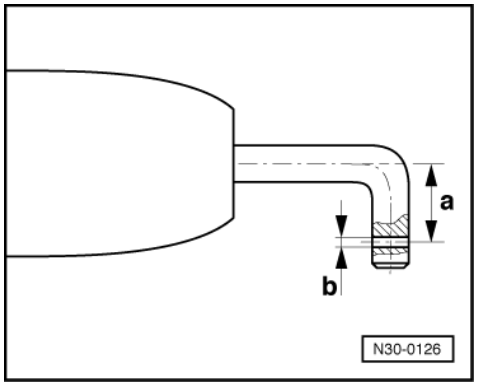

Protected by copyright. Copying for private or commercial purposes, in part or in whole, is not permitted unless authorised by Volkswagen AG. Volkswagen AG does not guarantee or accept any liability with respect to the correctness of information in this document. Copyright by Volkswagen AG.
satelettronica

-> Fig.4 Reworking gear selector rod

- In cases of complaints drill holes at ends to following dimensions:

  Dimension -a- = 16.5 mm
  Dimension -b- = 2.5 mm ø

- First remove retaining lugs.
- For securing purposes use previous securing spring or 2.0 mm ø split pin.

1.6 - Removing and installing gearstick/selector rod

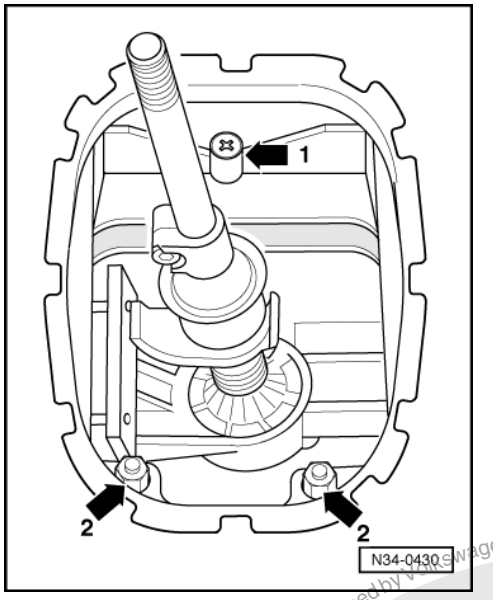

Removing

Vehicles with rubber cover:

- Detach rubber cover from frame.
- Unscrew gearstick knob together with rubber cover from gearstick.
- -> Unscrew cross-head screw (arrow 1).
- Unscrew securing nuts for frame/gearstick housing (arrows 2).

Vehicles with leatherette gaiter:

- Pull leatherette gaiter off frame.

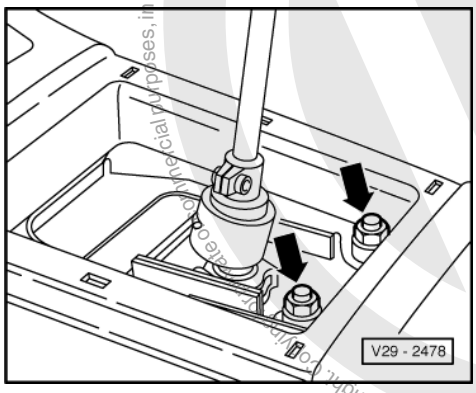

- Unscrew gearstick knob together with leatherette gaiter from gearstick.
- Lever frame off console.

Protected by Copyright. Copying for private or commercial purposes, in part or in whole, is not permitted unless authorised by Volkswagen AG. Volkswagen AG does not guarantee or accept any liability with respect to the correctness of information in this document. Copyright by Volkswagen AG.
satelettronica

- -> Unscrew securing nuts (arrows) for centre console/gearstick housing.

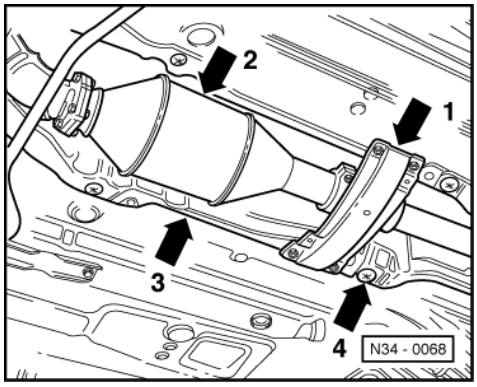

- -> Remove front cross support (arrow 1), below exhaust system.
- If fitted remove Lambda probe from catalyst (arrow 2) or from front exhaust pipe.

=> 4-Cyl. engine, Mechanics, Repair group 26

- Remove catalyst (arrow 2)/front exhaust pipe and front heat shield (arrow 3).

=> 4-Cyl. engine, Mechanics, Repair group 26

- Loosen rear heat shield (arrow 4) in forward area.

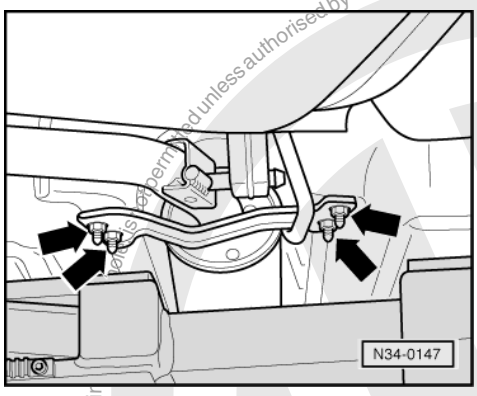

- -> Remove rear cross member (arrows).
- Remove rear heat shield.
- Detach exhaust system from mounting and support.

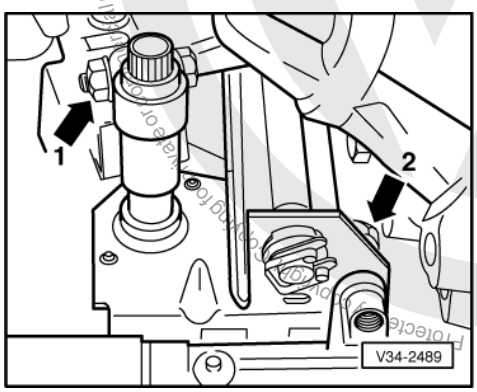

- -> Remove securing bolt (arrow 1) for selector rod/gate lever clamp and forward mounting bracket securing bolt (arrow 2) on steering box.

Protected by copyright. Copying or distribution is not permitted unless authorised by Volkswagen AG. Volkswagen AG does not guarantee or accept any liability with respect to the correctness of information in this document. Copyright by Volkswagen AG.
satelettronica

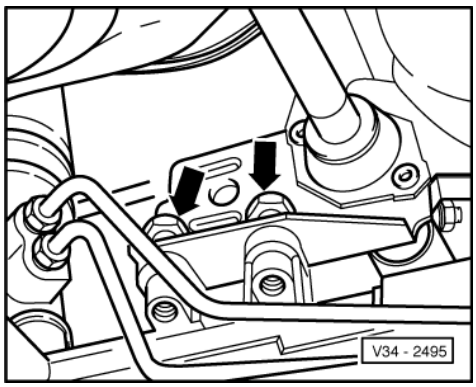

- -> Unbolt mounting bracket from steering (arrows).
- Unbolt gear stick housing from body.
- Push gear stick housing to rear, push selector rod with mounting bracket and gate lever up into engine compartment and pull mounting bracket together with gate lever off selector rod.

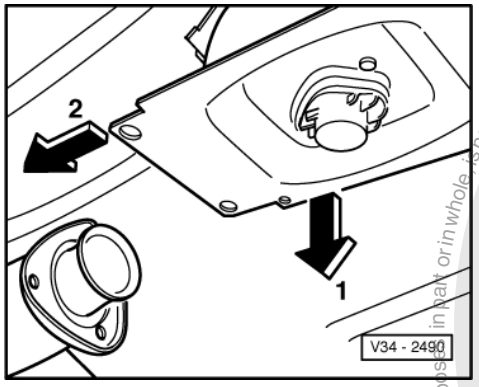

- -> Swing gear stick housing with selector rod down (arrow 1), when doing this push towards engine (arrow 2) and remove.

Installing

Install in reverse order.

Tightening torque => from page 50 .

Adjusting selector mechanism => Page 65 .

1.7 - Adjusting gear selector mechanism

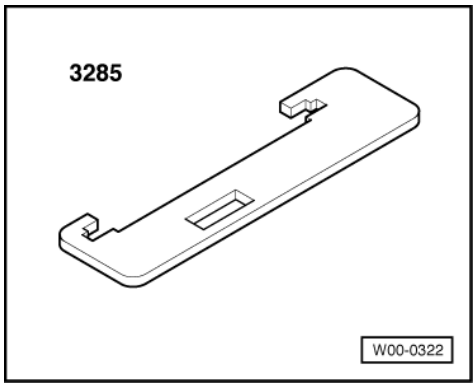

Protected by copyright. Copying for private or commercial purposes, in part or in whole, is not permitted unless authorised by Volkswagen AG. Volkswagen AG does not guarantee or accept any liability with respect to the correctness of information in this document. Copyright by Volkswagen AG.
satelettronica

Protected by copyright. Copyright by Volkswagen AG. Volkswagen AG does not guarantee or accept any liability with respect to the correctness of information in this document. Copyright by Volkswagen AG. Volkswagen AG, Wolfsburg, is not permitted unless authorised by Volkswagen AG. Volkswagen AG does not guarantee or accept any liability with respect to the correctness of information in this document. Copyright by Volkswagen AG.

Special tools and workshop equipment required

- 3421 Gear lever jig

Notes:

The following points are essential to ensure correct selector adjustment:

- Moving parts of selector mechanism and transmission elements must be in proper condition.
- Selector mechanism must move freely.

The gearbox, clutch and clutch mechanism must also be in proper condition.

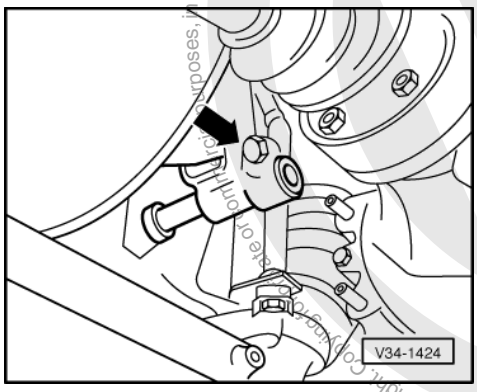

- Gearbox in neutral position.

- -> Loosen clamp (arrow). The joint selector rod/selector lever must be free to move.

Vehicles with rubber cover:

- Remove rubber cover together with gearstick knob.
- Remove frame => Page 63 .

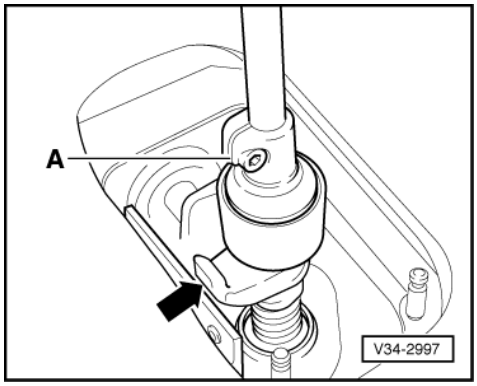

Vehicles with leatherette gaiter:

- Pull off leatherette gaiter and frame.

- -> The eccentric adjuster on gear stick must be so aligned that the clamp -A- faces to reverse gear hook (arrow).

satelettronica

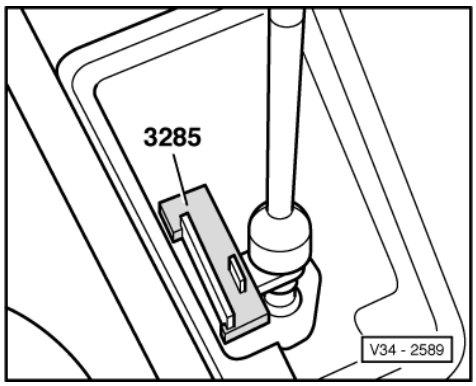

- -> Insert gear stick jig.
- Jig must not stick.
- Align selector rod and gate lever free of stress.

Note:

- Please ensure that the gearbox is not in gear (neutral position).

- Tighten clamp (arrow => Fig. V34-1401, Page 66) and remove gearstick jig.

Clamp for selector rod	25 Nm

Functional check

- The gearstick must rest in the 3rd/4th gear plane with gearbox in neutral.

- Select all gears several times. Pay particular attention to the operation of the reverse gear lock.

Should a gear fail to engage smoothly after repeated selection, then continue as follows:

- Engage 1st gear.

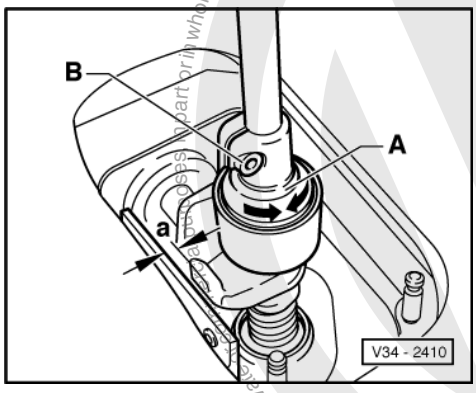

- Remove play from selector mechanism by carefully pushing gear stick to the left.

- -> Distance -a- must then be 0.5 mm to 1.5 mm.

- Should this not be the case, carry out fine adjustment with 1st gear selected =>Page 68 .

satelettronica
Protected by copyright. Copying for private or commercial purposes, in part or in whole, is not permitted unless authorised by Volkswagen AG. Volkswagen AG does not guarantee or accept any liability with respect to the correctness of information in this document. Copyright by Volkswagen AG.

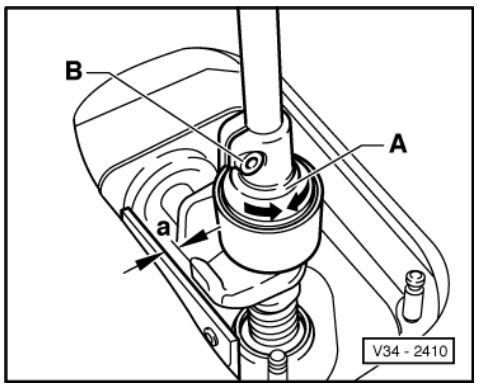

Fine adjustment

- 1st gear selected.

- -> Loosen clamp bolt -B-.
- Set to dimension -a- by turning the adjustment eccentric -A-.
- Tighten clamp bolt -B-.
- Clip cover into frame.

Tightening torque

Eccentric adjustment clamping bolt	2 Nm

Protected by copyright. Copying for private or commercial purposes, in part or in whole, is not permitted unless authorised by Volkswagen AG. Volkswagen AG does not guarantee or accept any liability with respect to the correctness of information in this document. Copyright by Volkswagen AG.

satelettronica

2 - Servicing gearbox housing cover

2.1 - Servicing gearbox housing cover

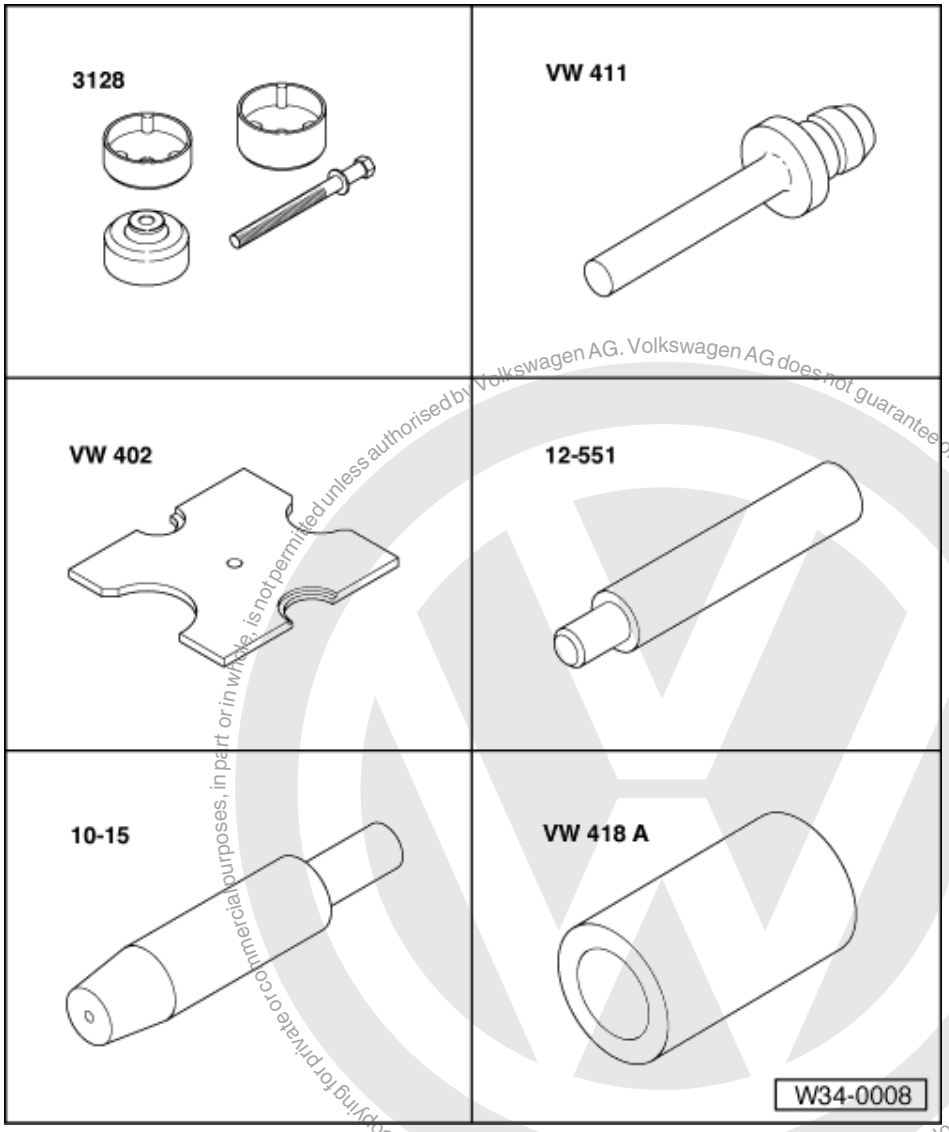

Protected by copyright. Copying for private or commercial purposes, in part or in whole, is not permitted unless authorised by Volkswagen AG. Volkswagen AG does not guarantee or accept any liability with respect to the correctness of information in this document. Copyright by Volkswagen AG.

satelettronica

Special tools and workshop equipment required

- 3128 Puller
- VW 411 Press tool
- VW 402 Press plate
- 12-551 Centring mandrel
- 10-15 Guide pin
- VW 418 A Tube

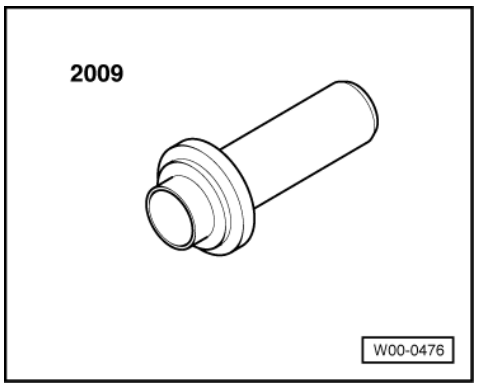

Special tools and workshop equipment required

- 2009 Fitting sleeve

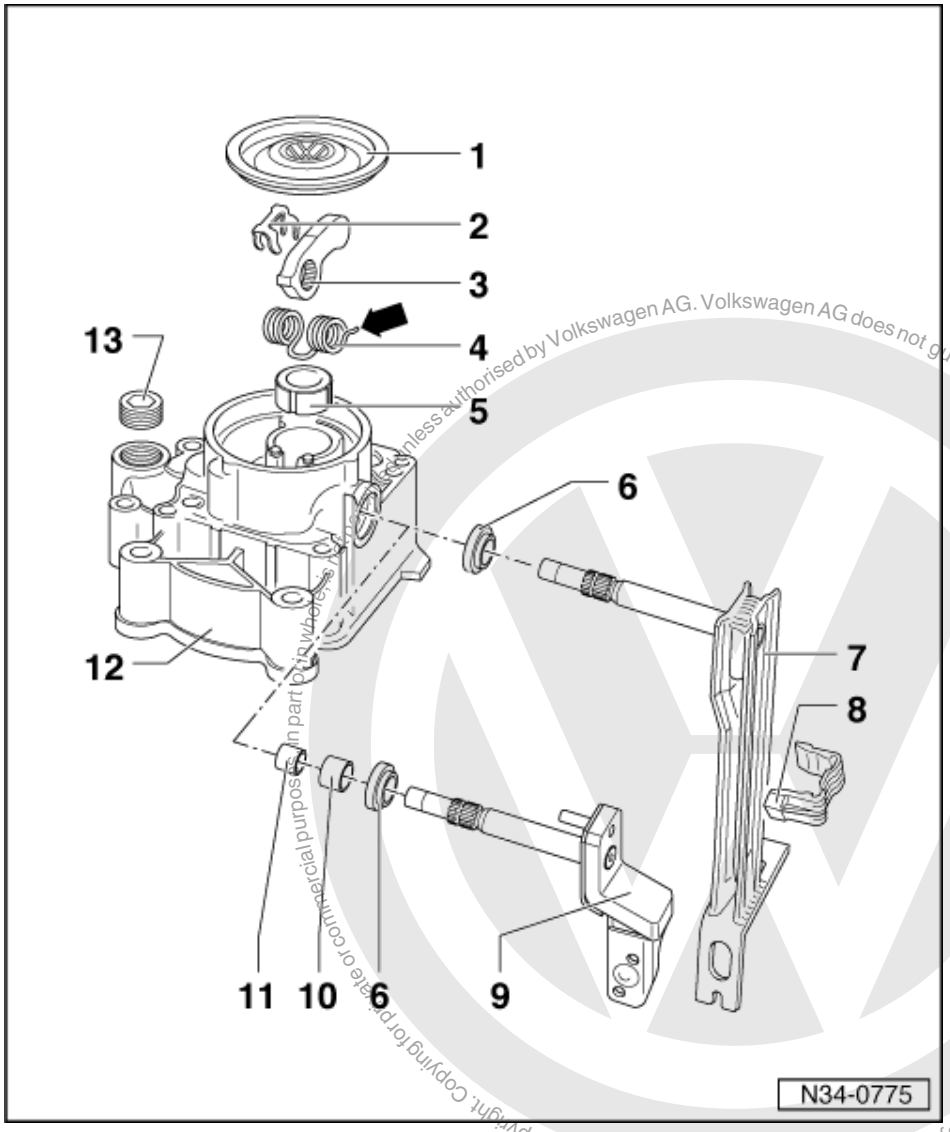

1 **Sealing cap**
- Renew
- Removing: Pierce and lever out
- Installing => Fig. 1

2 **Securing clip**

3 **Clutch lever**

Protected by copyright. Copying for private or commercial purposes, in part or in whole, is not permitted unless authorised by Volkswagen AG. Volkswagen AG does not guarantee or accept any liability with respect to the correctness of information in this document. Copyright by Volkswagen AG.
satelettronica

- Only fits in one position

4 Return spring
- Installation position => Fig. 2

5 Release bearing
- Can be renewed with gearbox installed

6 Oil seal
- Driving in => Fig. 7
- Can be renewed with gearbox installed, to do this remove release shaft (item 7 or 9)

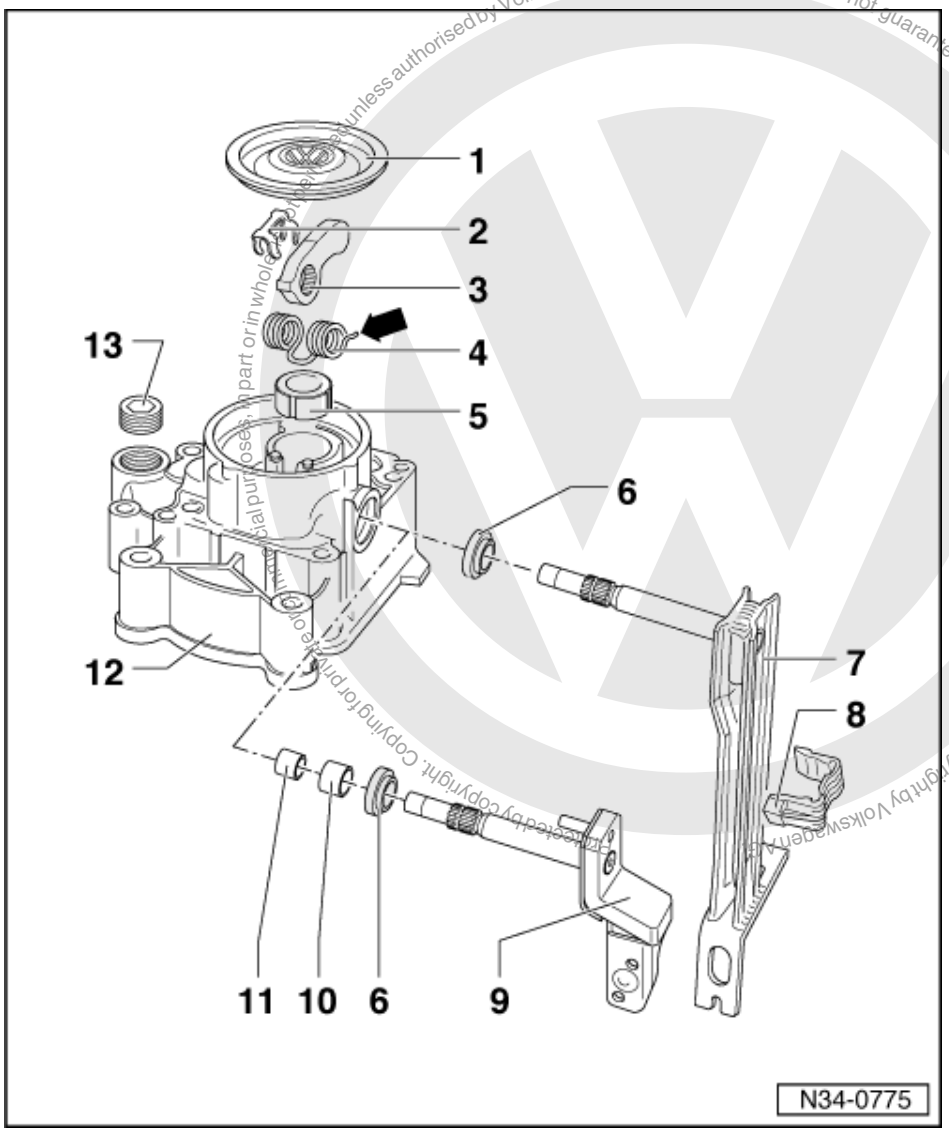

7 Release shaft
- For vehicles with mechanical clutch control
- Removing: Take off stop buffer (item 8), sealing cap (item 1) and securing clip (item 2), pull out release shaft.

8 Stop buffer

9 Release shaft
- For vehicles with hydraulic clutch control
- Removing: Take off sealing cap (item 1) and securing clip (item 2), pull out release shaft.

10 Large mounting bush
- Pressing out => Fig. 3
- Pressing in => Fig. 4

11 Small mounting bush
- Pulling out => Fig. 5

satelettronica

- Pressing in => Fig. 6

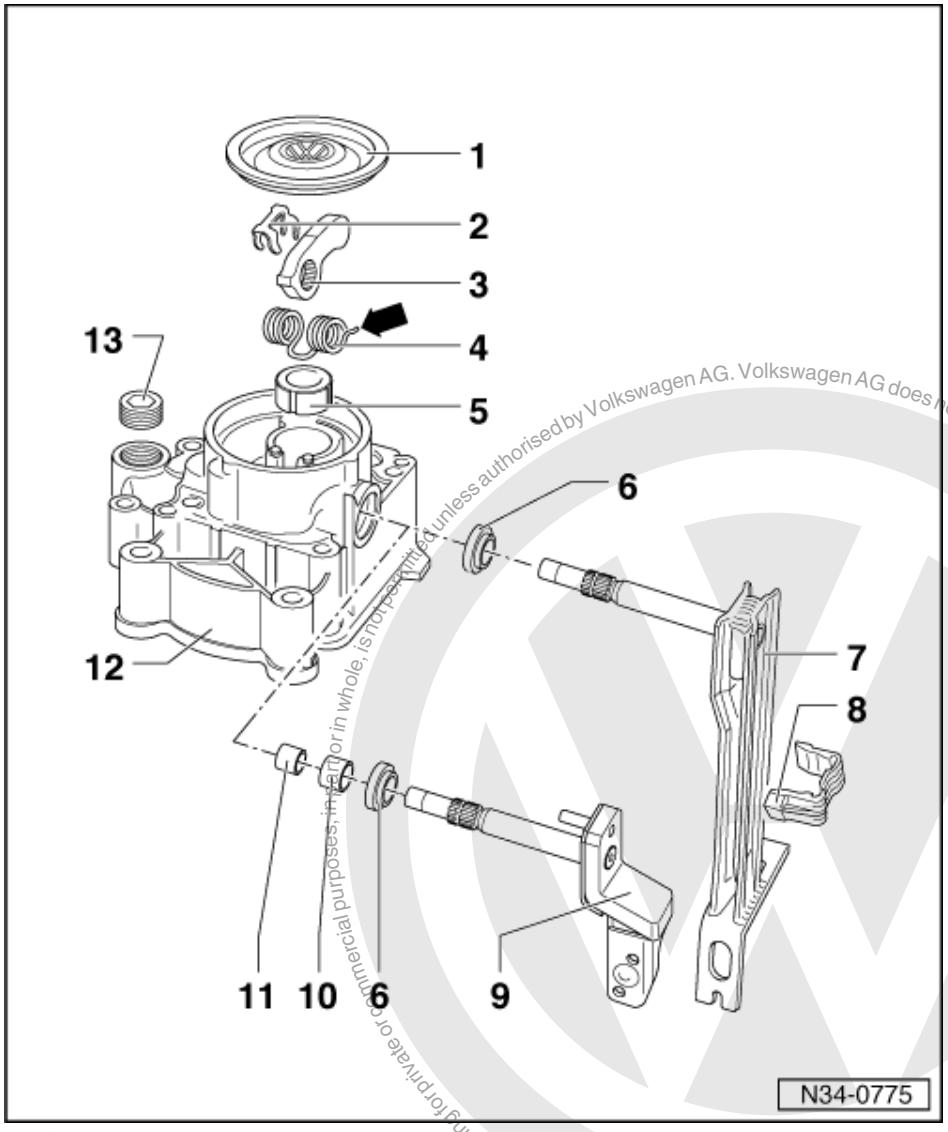

12 Gearbox housing cover

- Only version with mounting bushes (item 10 and 11) are available as a spare part
- Cover can be installed to all gearboxes.

13 Oil filler plug, 25 Nm

- Without magnet

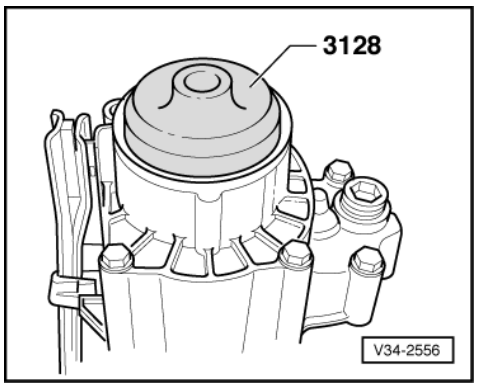

Protected by copyright. Copying for private or commercial purposes, in part or in whole, is not permitted unless authorised by Volkswagen AG. Volkswagen AG does not guarantee or accept any liability with respect to the correctness of information in this document. Copyright by Volkswagen AG.
satelettronica

-> Fig.1 Installing sealing cap

Note:

Sealing surface on gearbox housing cover must be free of grease.

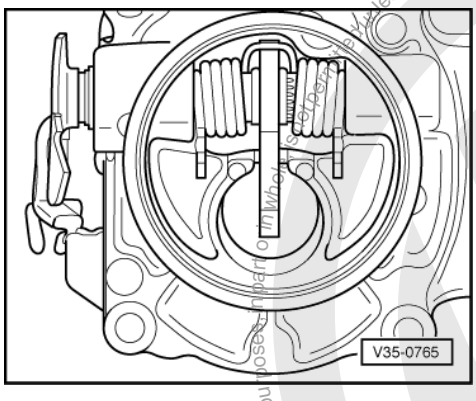

-> Fig.2 Return spring installation position

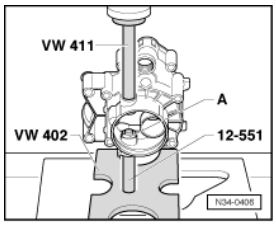

Protected by copyright. Copying for private or commercial purposes, partially or wholly is prohibited unless authorised by Volkswagen AG. Volkswagen AG does not guarantee or accept any liability with respect to the correctness of information in this document. Copyright by Volkswagen AG.

satelettronica

-> Fig.3 Pressing out large mounting bush -A-

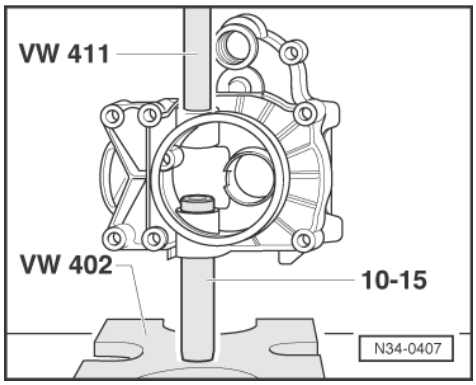

-> Fig.4 Pressing in large mounting bush

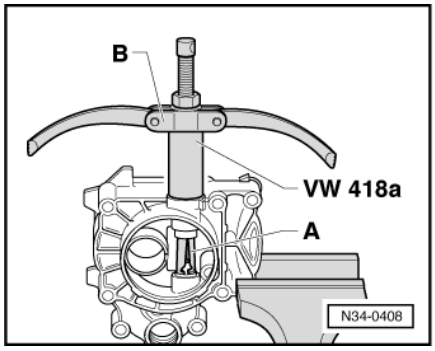

-> Fig.5 Pulling out small mounting bush

A - Internal extractor 10 ... 14 mm, e.g. Kukko 21/02

B - Counter support, e.g. Kukko 22/1

Note:

Mounting bush will be damaged when pulling out therefore always renew.

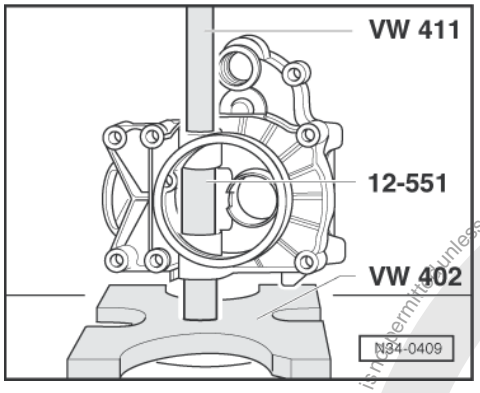

-> Fig.6 Pressing in small mounting bush

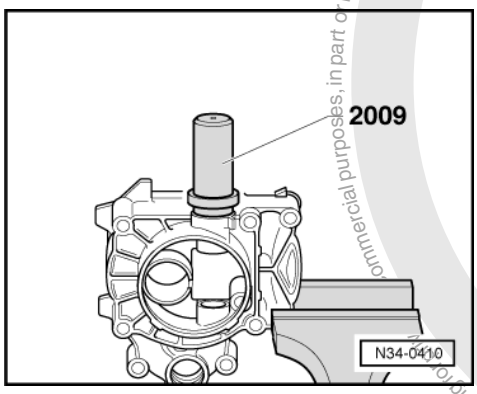

-> Fig.7 Driving in release shaft seal

- Clamp gearbox housing cover in vice using protective vice clamps.

Protected by copyright. Copying for commercial purposes, in part or in whole, is not permitted unless authorised by Volkswagen AG. Volkswagen AG does not guarantee or accept any liability with respect to the correctness of information in this document. Copyright by Volkswagen AG.
satelettronica

3 - Removing and installing gearbox

3.1 - Removing and installing gearbox

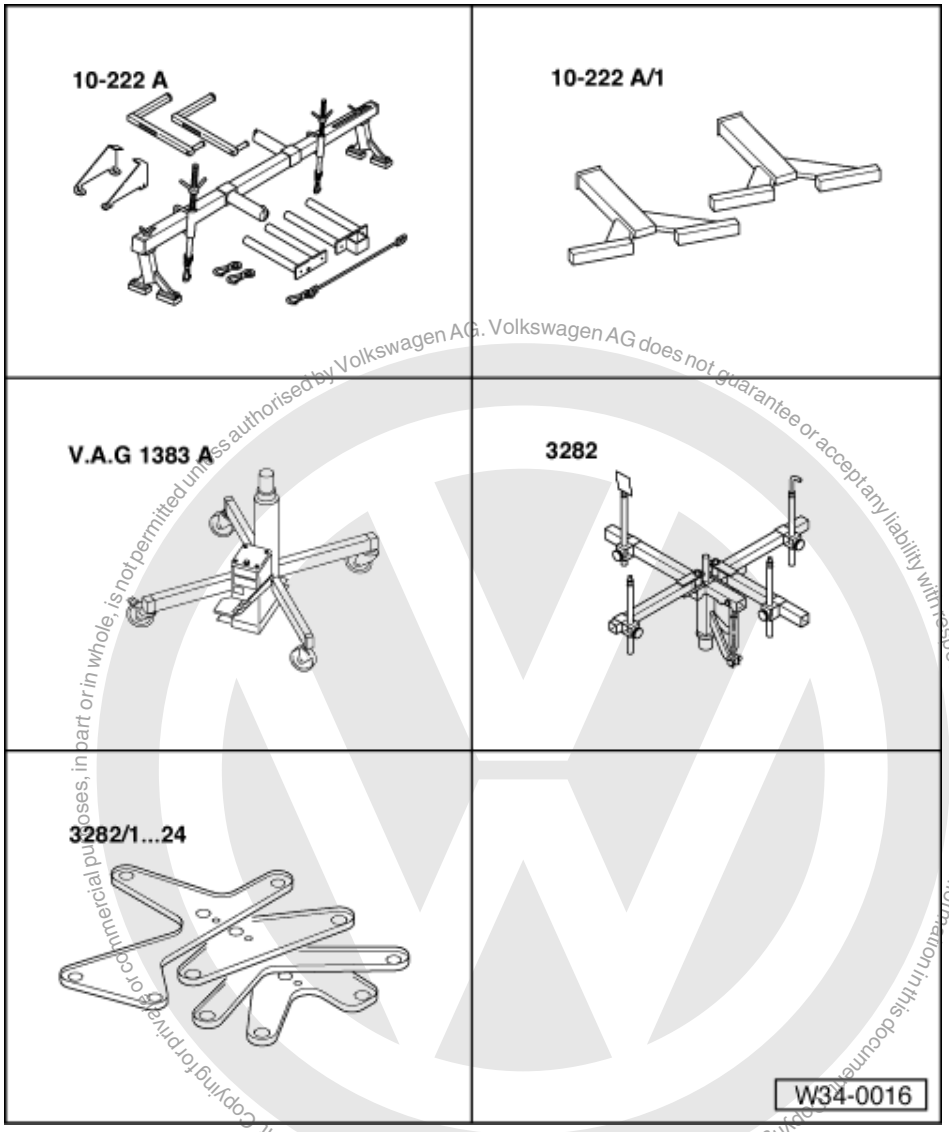

Protected by copyright. Copying for private or commercial purposes, in part or in whole, is not permitted unless authorised by Volkswagen AG. Volkswagen AG does not guarantee or accept any liability with respect to the correctness of information in this document. Copyright by Volkswagen AG.

satelettronica

Special tools and workshop equipment required

- 10-222 A Support
- 10-222 A/1 Support
- V.A.G 1383 A Gearbox jack
- 3282 Gearbox support
- 3282/5 Adjustment plate
- 3282/40 Pins (Qty. 2)
- 3282/59 Support

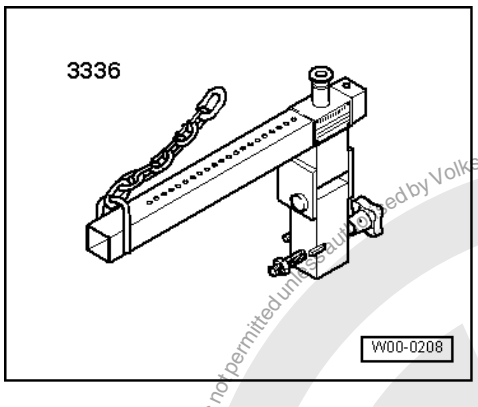

Special tools and workshop equipment required

- 3336 Gearbox lifting beam

Removing

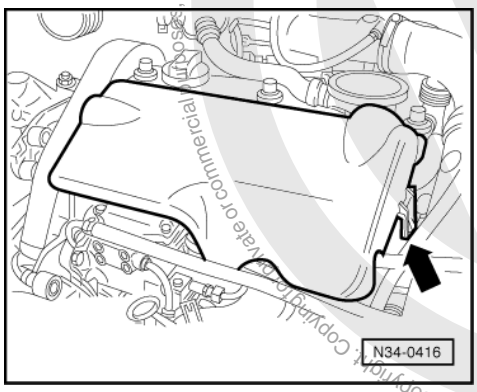

- -> Remove cover from engine -arrow-.

  Illustration shows vehicle fitted with Diesel engine.

Note:

Check whether a coded radio is installed as during the forthcoming work sequences the battery earth strap must be disconnected. Obtain radio code first if necessary.

- With the ignition switched off disconnect the battery earth strap.
- Loosen hexagon nut on left drive shaft.

Vehicles with mechanical clutch control

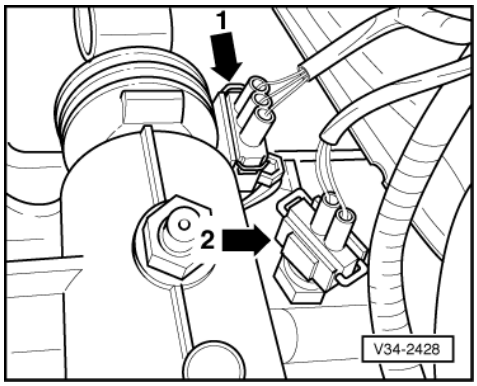

- Fully depress clutch pedal onto stop at least 5 times.

Protected by copyright. Copying for private or commercial purposes, in part or in whole, is not permitted unless authorised by Volkswagen AG. Volkswagen AG does not guarantee or accept any liability with respect to the correctness of information in this document. Copyright by Volkswagen AG.
satelettronica

- Tension clutch cable and remove at gearbox =>Page 24 .

Continued for all vehicles

- -> Pull connector off road speed sender (arrow 1).

- Pull off reverse light connector (arrow 2). Disconnect all other electrical connections and earth wires from gearbox and from the engine/gearbox securing bolts.

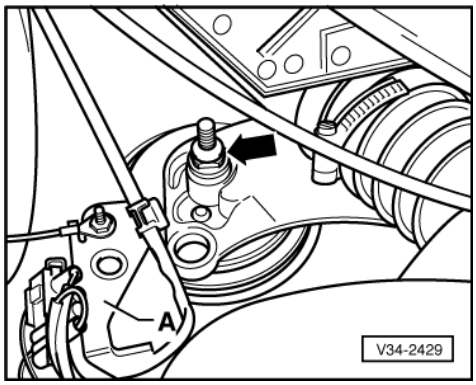

- Remove upper engine/gearbox securing bolts.
- -> Remove bolt (arrow) on engine console/sub-frame, right. If fitted remove connector mounting plate -A-.

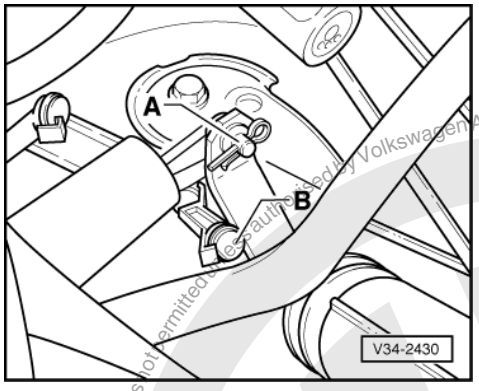

- -> Disconnect front gear selector rod -A- and short gate selector rod -B- at selector shaft lever.

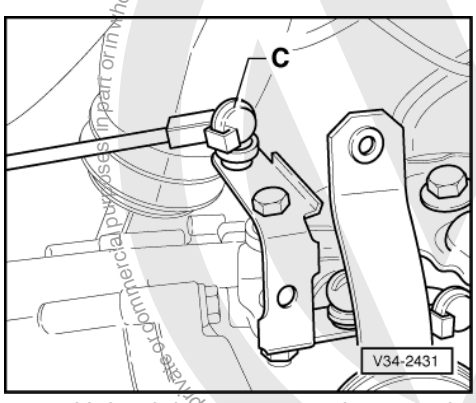

- -> Unhook longer gate selector rod -C- at relay lever, but first open clip.

Protected by copyright. Copying for private or commercial purposes, in part or in whole, is not permitted unless authorised by Volkswagen AG. Volkswagen AG does not guarantee or accept any liability with respect to the correctness of information in this document. Copyright by Volkswagen AG.
satelettronica

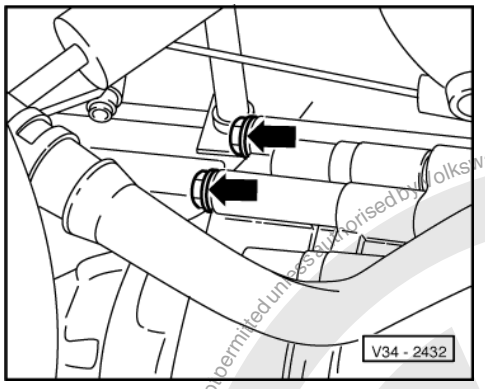

- -> Unbolt the two upper left gearbox console bolts (arrows) from gearbox.

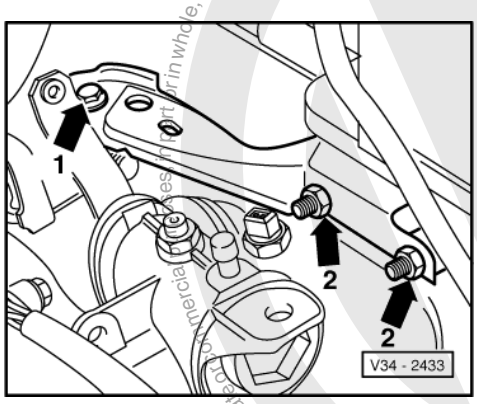

- -> Unbolt hexagon bolt (arrow 1) on left gearbox assembly mounting.
- Remove left gearbox support hexagon nuts (arrows 2) if fitted.

Vehicles with hydraulic clutch control

- Remove slave cylinder bracket hexagon nuts => Page 34 .

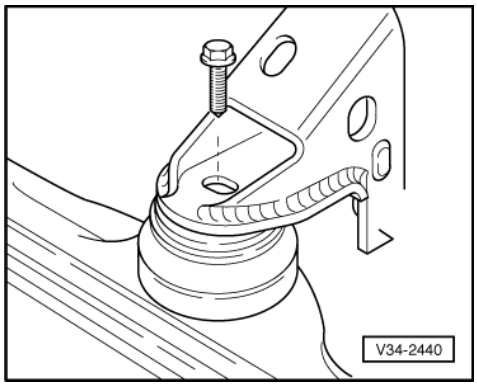

Continued for all vehicles

- -> Unbolt front console securing bolt on engine mounting.

Protected by copyright. Copyright by Volkswagen AG.
Copyright by Volkswagen AG. Volkswagen AG does not guarantee or accept any liability with respect to the correctness of information in this document.
satelettronica

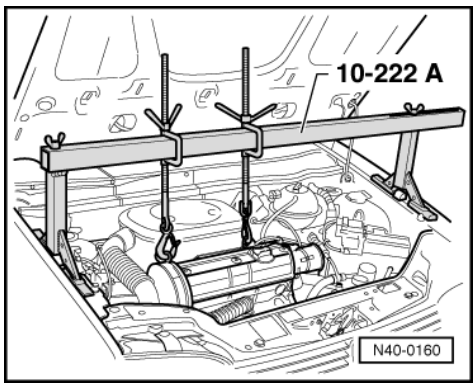

- -> Fit support bar 10-222 A with legs 10-222 A/1 and support engine/gearbox in this position.

Note:

Before fitting the support hooks of the support bar, remove hose and wire connections from engine in the area of the lifting eyes, so that they are not damaged.

- Take weight of engine/gearbox assembly on the spindles.

- Remove insulation tray below engine/gearbox, if fitted.
- Remove lower ribbed belt guard/engine.

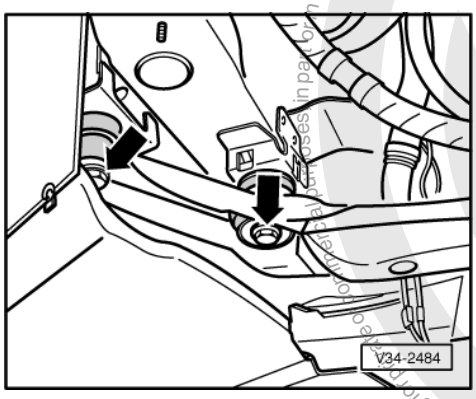

- Remove starter.

=> Repair group 27; Removing and installing starter. Removing and installing starter.

- Unbolt front console at engine carrier.
- Remove the bracket for the power-assisted steering pipe from engine carrier.
- -> Remove engine carrier (illustration shows left securing bolt).

Protected by copyright. Copying for private or commercial purposes, in part or in whole, is not permitted unless authorised by Volkswagen AG. Volkswagen AG does not guarantee or accept any liability with respect to the correctness of information in this document. Copyright by Volkswagen AG.
satelettronica

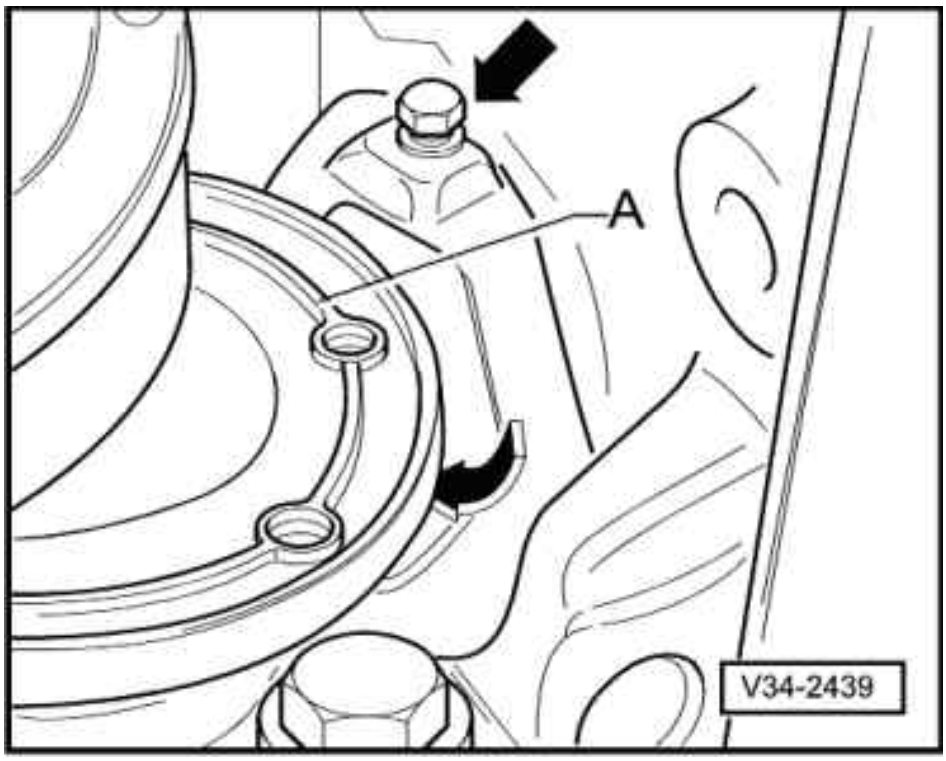

- Remove large clutch cover plate.
- -> Remove small cover plate -A- behind right-hand drive flange (arrows) if fitted.

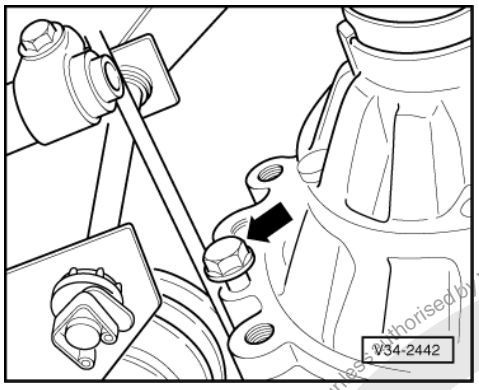

- -> Remove third bolt (arrow) for left gearbox console and take gearbox console out.

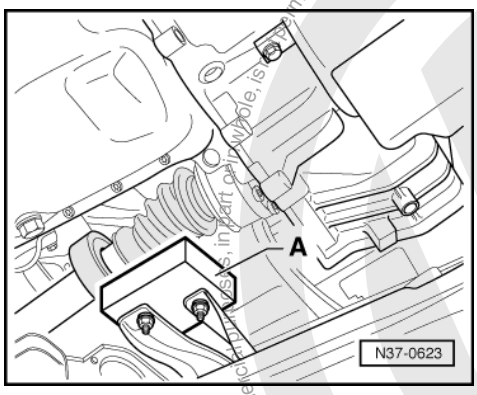

- -> Remove vibration damper -A- from sub-frame. Mark installation position.
- Unbolt drive shafts from gearbox, to do this turn steering onto full left lock.
- Remove left drive shaft

satelettronica
Protected by copyright. Copying for private or commercial purposes, in part or in whole, is not permitted unless authorised by Volkswagen AG. Volkswagen AG does not guarantee or accept any liability with respect to the correctness of information in this document. Copyright by Volkswagen AG.

=> Running gear; Repair group 40

- Tie-up right-hand drive shaft as high as possible,

Vehicles with hydraulic clutch control

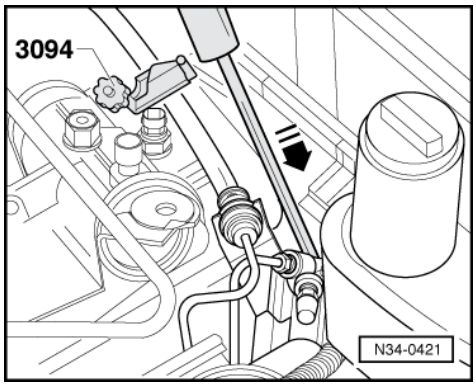

- -> Press slave cylinder together with a screwdriver (direction of arrow) and clamp-off hose with hose clamp 3094.
- Remove the slave cylinder and move away upwards, secure with wire, do not disconnect pipes.

Note:

Do not depress clutch pedal.

Continued for all vehicles

- Lower gearbox via both spindles, if fitted pull out bolts for left gearbox support and then tilt assembly using left spindle.

Vehicles with hydraulic clutch control

- If fitted remove bracket for slave cylinder.

Continued for all vehicles

- Assemble gearbox jack with gearbox support 3282, adjustment plate 3282/5 for "020" gearbox and support elements as follows:

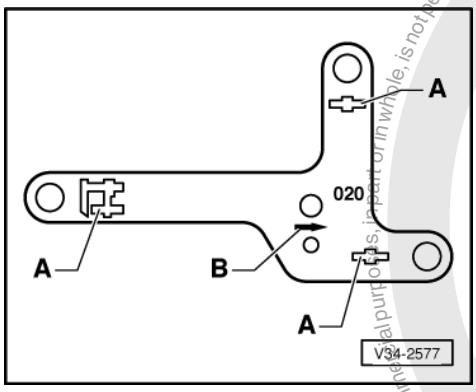

- Place adjustment plate 3282/5 on gearbox support 3282. (Adjustment plate only fits in one position).
- Align arms of gearbox support according to holes in adjustment plate.
- -> Bolt on support elements -A-, as illustrated on adjustment plate.

satelettronica
Protected by copyright. Copying for private or commercial purposes, in part or in whole, is not permitted unless authorised by Volkswagen AG. Volkswagen AG does not guarantee or accept any liability with respect to the correctness of information in this document. Copyright by Volkswagen AG.

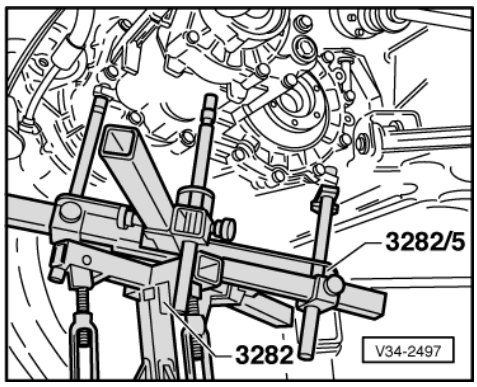

- -> Place gearbox jack under vehicle, arrow symbol -B- (=> Illustration V34-2577) on adjustment plate points to front of vehicle.
- Align adjustment plate parallel to gearbox and lock safety supports on gearbox.

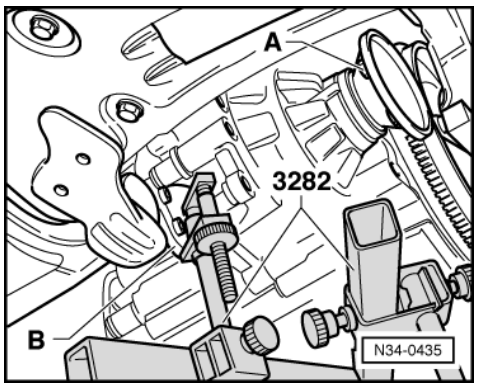

- Remove lower engine/gearbox securing bolts.
- -> Press gearbox off dowels and lower carefully, when doing this guide assembly on left -B- and right -A- flange shafts.

Note:

Do not damage P.A.S pipe when lowering gearbox.

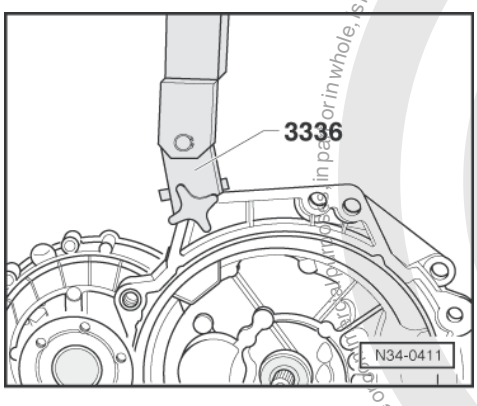

Transporting the gearbox

Special tool 3336 may be used to transport the gearbox and also when setting up gearbox mount 3282.

- -> Bolt gearbox lifting device 3336 to clutch housing.

Copyright by Volkswagen AG. Volkswagen AG does not guarantee or accept any liability with respect to the correctness of information in this document. Copying for private or commercial purposes, in part or in whole, is not permitted unless authorised by Volkswagen AG.
Protected by copyright.
satelettronica

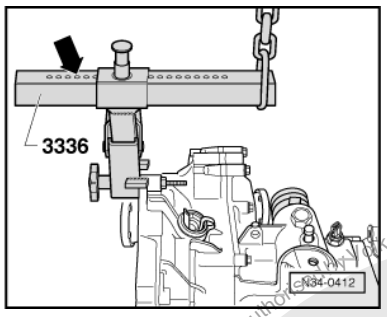

- -> Set support beam on sliding piece with locking pin (arrow).

No. of holes visible = 6

- Take gearbox out with workshop crane and gearbox lifting device 3336.

Installing

- Clean input shaft splines and lightly grease with G000 100 grease.

The clutch plate must be able to slide lightly to and fro on the input shaft.

- Check whether dowel sleeves for aligning engine/gearbox are fitted in cylinder block, install if necessary.
- Ensure that the intermediate plate is correctly positioned on engine.
- Assemble gearbox jack with gearbox support 3282, adjustment plate 3282/5 for "020" gearbox and support elements as follows:

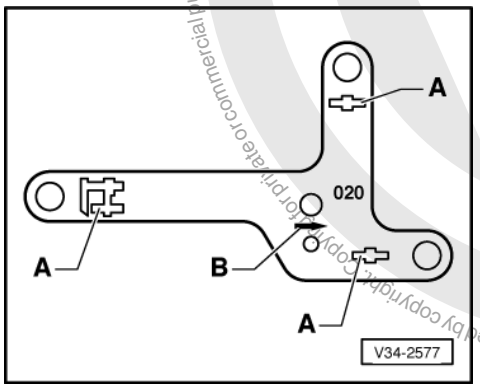

- Place adjustment plate 3282/5 on gearbox support 3282. (Adjustment plate only fits in one position).
- Align arms of gearbox support according to holes in adjustment plate.
- -> Bolt on support elements -A-, as illustrated on adjustment plate.

- Place gearbox on gearbox jack.
- Align adjustment plate and gearbox parallel with one another and lock safety supports on gearbox.

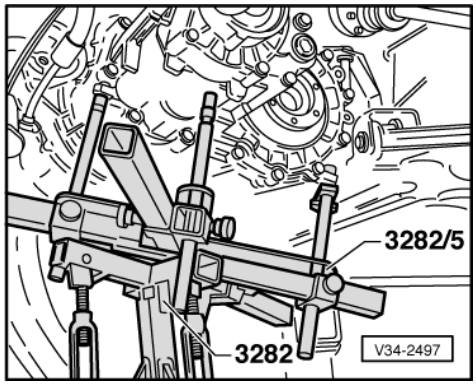

- -> Place gearbox jack under vehicle, arrow symbol -B- (=> Illustration V34-2577) on adjustment plate points to front of vehicle.
- Align adjustment plate parallel to gearbox and lock safety supports on gearbox.

Protected by copyright. Copyright by Volkswagen AG. Volkswagen AG does not guarantee or accept any liability with respect to the correctness of information in this document. Copyright by Volkswagen AG. Copy for private or commercial purposes, in part or in whole, is not permitted unless authorized by Volkswagen AG.
satelettronica

Protected by copyright. Copyright by Volkswagen AG. Volkswagen AG does not guarantee or accept any liability with respect to the correctness of information in this document. Copyright by Volkswagen AG. Copying for private or commercial purposes, in part or in whole, is not permitted unless authorised by Volkswagen AG.

- Insert gearbox.

Note:

Do not damage P.A.S pipe.

- Install lower engine/gearbox securing bolts.
- If it was removed install left gearbox support.

Vehicles with hydraulic clutch control

- Install bracket for slave cylinder.

Continued for all vehicles

- Align engine/gearbox in installation position. To do this tighten the left-hand spindle on support bar 10-222 A.

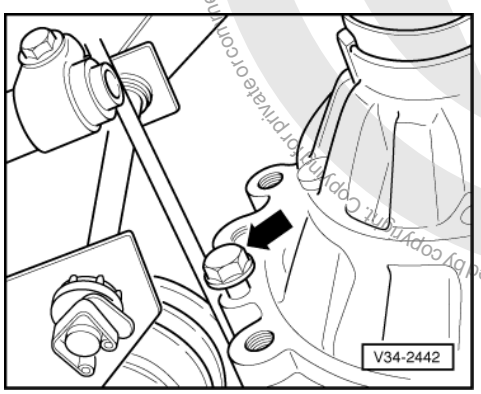

- Install left drive shaft

=> Running gear; Repair group 40

- Fit drive shafts to gearbox.
- -> Attach left gearbox console with one bolt (arrow).

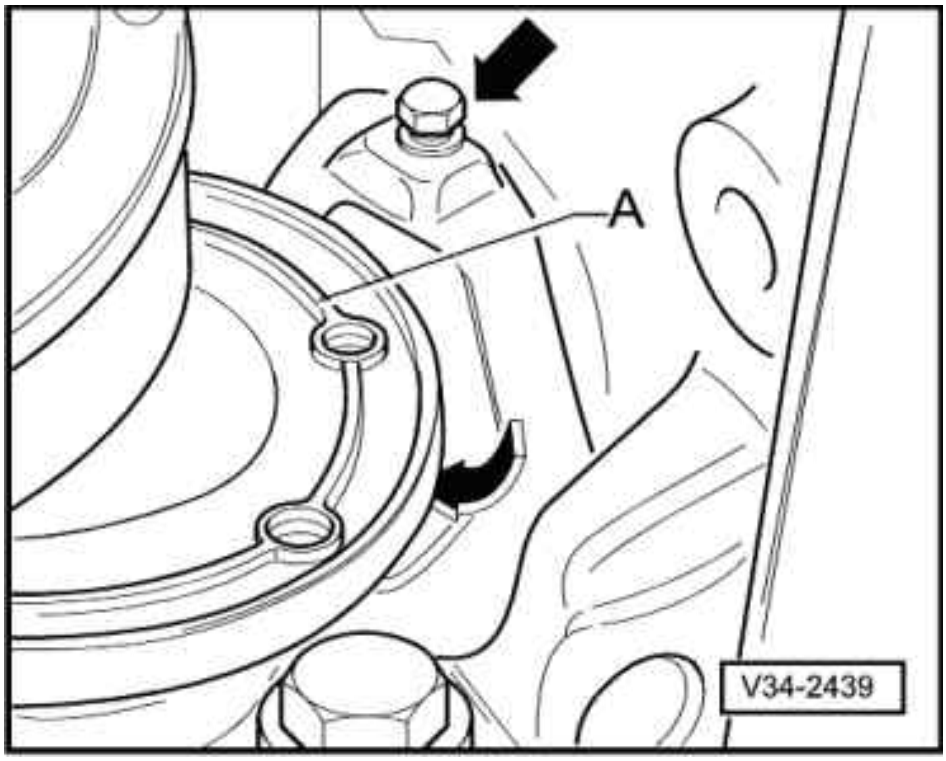

satelettronica

- -> If it was removed install small cover plate -A- behind right-hand drive flange (arrows).
- Install large clutch cover plate.

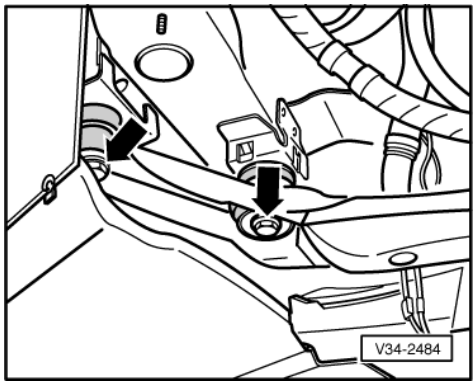

- -> Install engine carrier (illustration shows left securing bolt).
- Fit retainer for power-assisted steering pipe to engine carrier.
- Install starter.

=> Repair group 27; Removing and installing starter. Removing and installing starter.

- Install cover in front of toothed belt guard/engine.

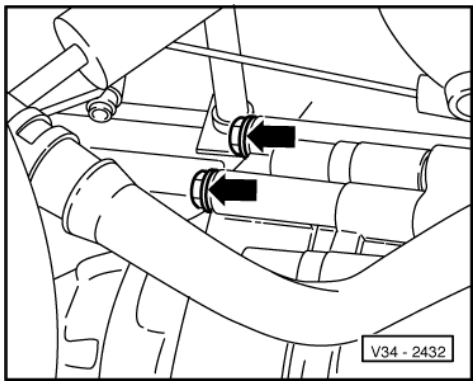

- -> Insert two upper bolts (arrows) for left gearbox console from gearbox and tighten.

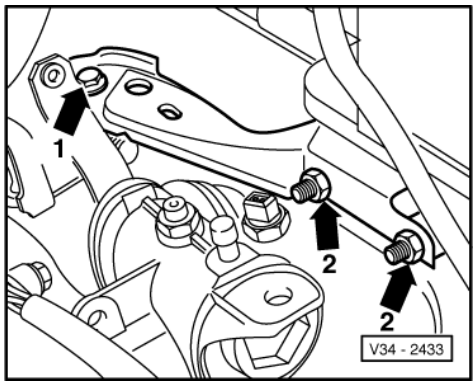

- If removed, fit the hexagon nuts (arrow 2) for left gearbox support and tighten.
- -> Insert hexagon bolt (arrow 1) in left gearbox assembly mounting.

Vehicles with hydraulic clutch control

- Tighten hexagon nuts for slave cylinder bracket to correct tightening torque => Page 34 .

Protected by copyright. Copying for private or commercial purposes, in part or in whole, is not permitted unless authorised by Volkswagen AG. Volkswagen AG does not guarantee or accept any liability with respect to the correctness of information in this document. Copyright by Volkswagen AG.
satelettronica

Continued for all vehicles

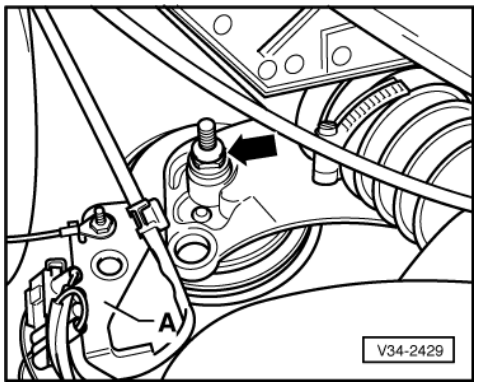

- -> Install bolt (arrow) on engine console/sub-frame, right. Fit connector mounting plate -A-, if fitted.

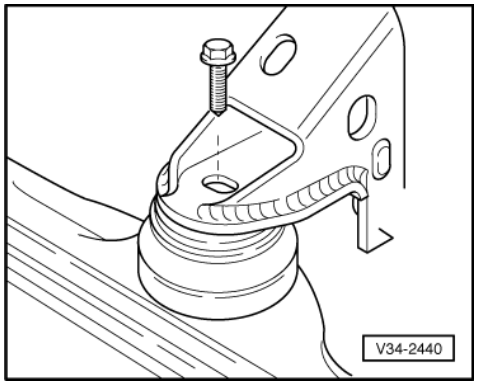

- -> Install front console securing bolt to engine mounting.

Vehicles with hydraulic clutch control

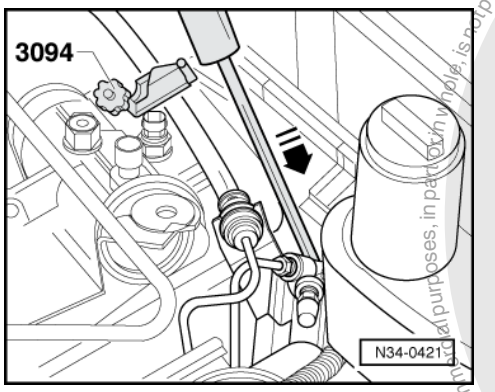

- -> Insert slave cylinder between bracket and release lever => Page 34 and remove hose clamp 3094. If necessary press slave cylinder together slightly with a screwdriver (direction of arrow).

Protected by copyright. Copying for private and commercial purposes, in part or in whole, is not permitted unless authorised by Volkswagen AG. Volkswagen AG does not guarantee or accept any liability with respect to the correctness of information in this document. Copyright by Volkswagen AG.
satelettronica

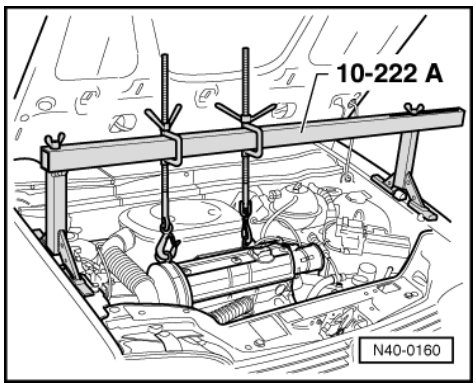

Continued for all vehicles

- -> Remove support bar 10-222A.
- Align engine/gearbox mountings stress-free by rocking assembly and tighten to appropriate tightening torque.

=> Repair group 10; removing and installing engine. removing and installing engine.

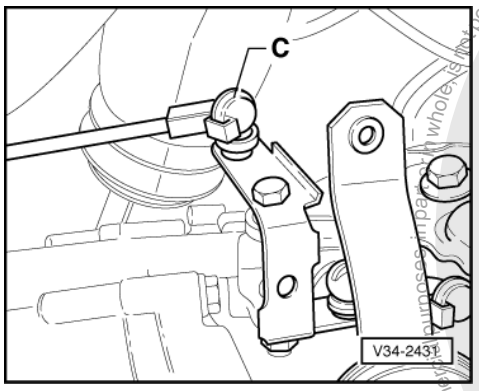

- -> Attach long gate selector rod -C- to relay lever. Lock clamp.

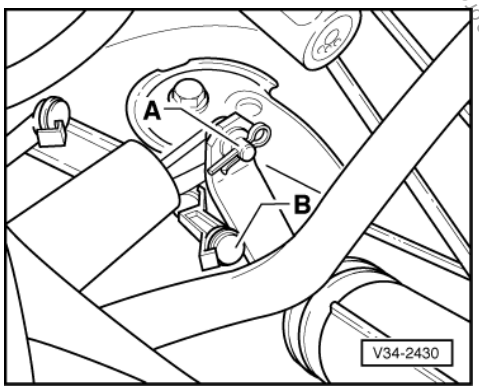

- -> Attach front selector rod -A- and short selector rod -B- to selector shaft lever.

Protected by copyright. Copying for private or commercial purposes, in part or in whole, is not permitted unless authorised by Volkswagen AG. Volkswagen AG does not guarantee or accept any liability with respect to the correctness of information in this document. Copyright by Volkswagen AG.
satelettronica

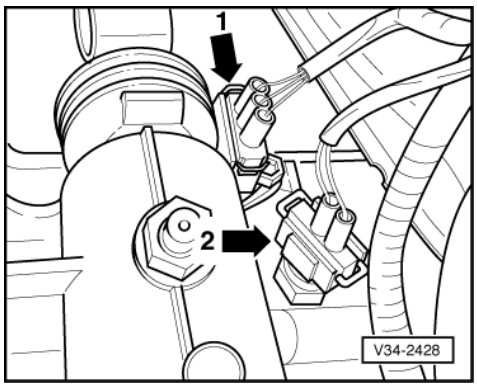

- -> Attach reversing light connector (arrow 2). Attach all other electrical connections and earth wires to gearbox and to the engine/gearbox securing bolts.

- Attach connector to speedometer sender (arrow 1).

Vehicles with mechanical clutch control

- Install clutch cable on gearbox => Page 25 .
- Check clutch cable function =>Page 22

Continued for all vehicles

- Adjusting gear change mechanism => Page 65 .
- Reconnect earth strap to battery.

Note:

Note radio coding for vehicles with coded radio.

Check gearbox oil; if necessary top-up to lower edge of oil filler hole, specification =>from Page 2 .

- Install insulation tray below engine/gearbox, if fitted.

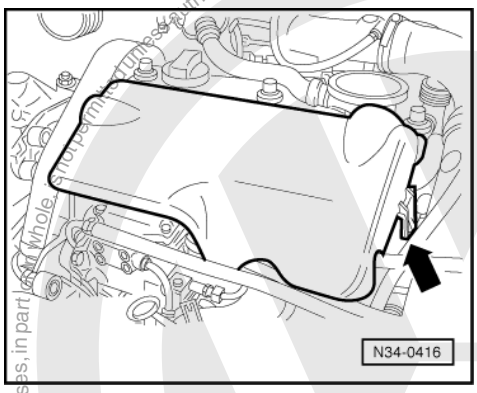

- Tighten hexagon nut for left drive shaft.

Note:

Only loosen and tighten drive shaft hexagon nuts with vehicle standing on its wheels. (Danger of accident).

- -> Install engine cover -arrow-.

Tightening torques

Gearbox to engine

Protected by copyright. Copyright by Volkswagen AG.
Copyright by Volkswagen AG does not guarantee or accept any liability with respect to the correctness of information in this document.
Copying for private or commercial purposes, in part or in whole, is not permitted unless authorised by Volkswagen AG.
satelettronica

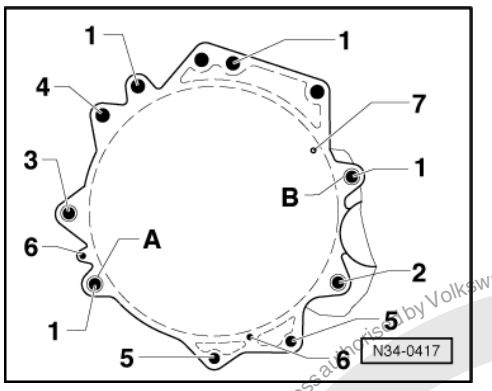

-> Vehicles with 1.4 and 1.6 ltr. engine

Item	Bolt	Qty.	Nm
1	M 12 x 55	4	80
21)	M 12 x 30	1	20
32)	M 12 x 130	1	80
42)	M 12 x 55	1	80
5	M 10 x 50	2	25
63)	M 7 x 12	2	10
74)	M 6 x 8	1	10

1) Cover plate

2) Also starter to gearbox

3) Flywheel large cover plate

4) Flywheel small cover plate

Items A + B - Fitting sleeves

Gearbox to engine

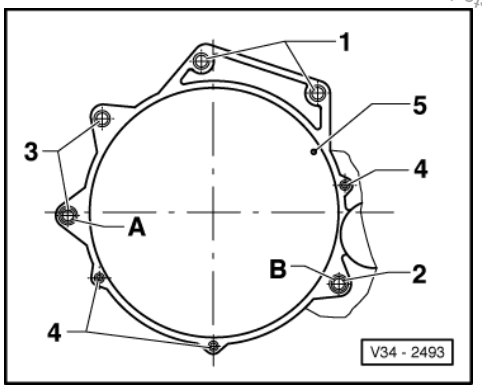

-> Vehicles with 1.8 ltr. engine

Item	Bolt	Qty.	Nm
1	M 12 x 55	2	80
2	M 12 x 64	1	80
31)	M 10 x 140	2	60
42)	M 7 x 12	3	10

Protected by copyright. Copying for private or commercial purposes, in part or in whole, is not permitted unless authorised by Volkswagen AG. Volkswagen AG does not guarantee or accept any liability with respect to the correctness of information in this document. Copyright by Volkswagen AG.
satelettronica

Protected by copyright. Copying for private or commercial purposes, in part or in whole, is not permitted unless authorised by Volkswagen AG. Volkswagen AG does not guarantee or accept any liability with respect to the correctness of information in this document. Copyright by Volkswagen AG.

Item	Bolt	Qty.	Nm
53)	M 6 x 8	1	10

1) Also starter to gearbox

2) Flywheel large cover plate

3) Flywheel small cover plate

Items A + B - Fitting sleeves

Gearbox to engine

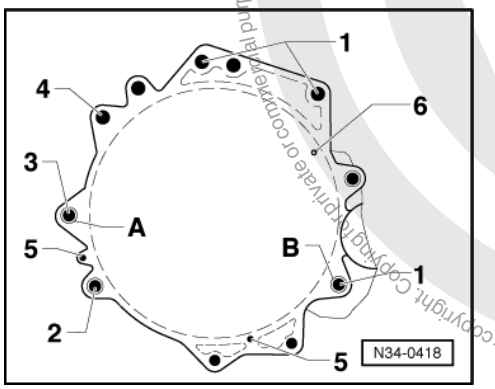

-> Alternatively vehicles from 1.8 ltr. engine

Item	Bolt	Qty.	Nm
1	M 12 x 55	3	80
2	M 10 x 50	1	25
31)	M 12 x 130	1	80
41)	M 12 x 55	1	80
52)	M 7 x 12	2	10
63)	M 6 x 8	1	10

1) Also starter to gearbox

2) Flywheel large cover plate

3) Flywheel small cover plate

Items A + B - Fitting sleeves

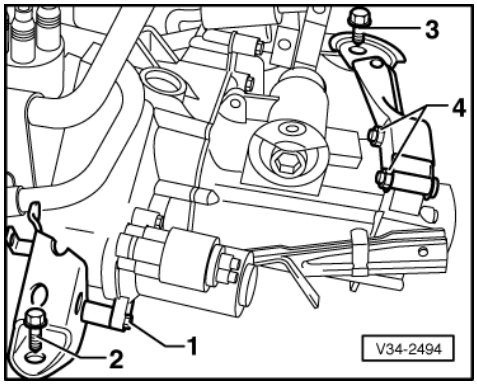

satelettronica

-> Assembly mountings

Pos.	Bolt	Qty.	Nm
1	M 10 x 60	1	45
2	M 10 x 30	1	60
3	M 10 x 45	1	60
Item	**Nut**	**Qty.**	**Nm**
41)	M 10	2	40

1) Only fitted to vehicles with a gearbox support.

Note:

Must be reinstalled on vehicles with a gearbox support, in cases of repair.

Left gearbox console to gearbox	35 Nm
Right engine console to assembly carrier	60 Nm
Engine mounting to body	50 Nm
Drive shaft to drive flange	45 Nm
Drive shaft to wheel bearing housing	265 Nm

Protected by copyright. Copying for private or commercial purposes, in part or in whole, is not permitted unless authorised by Volkswagen AG. Volkswagen AG does not guarantee or accept any liability with respect to the correctness of information in this document. Copyright by Volkswagen AG.
satelettronica

4 - Dismantling and assembling gearbox

4.1 - Dismantling and assembling gearbox

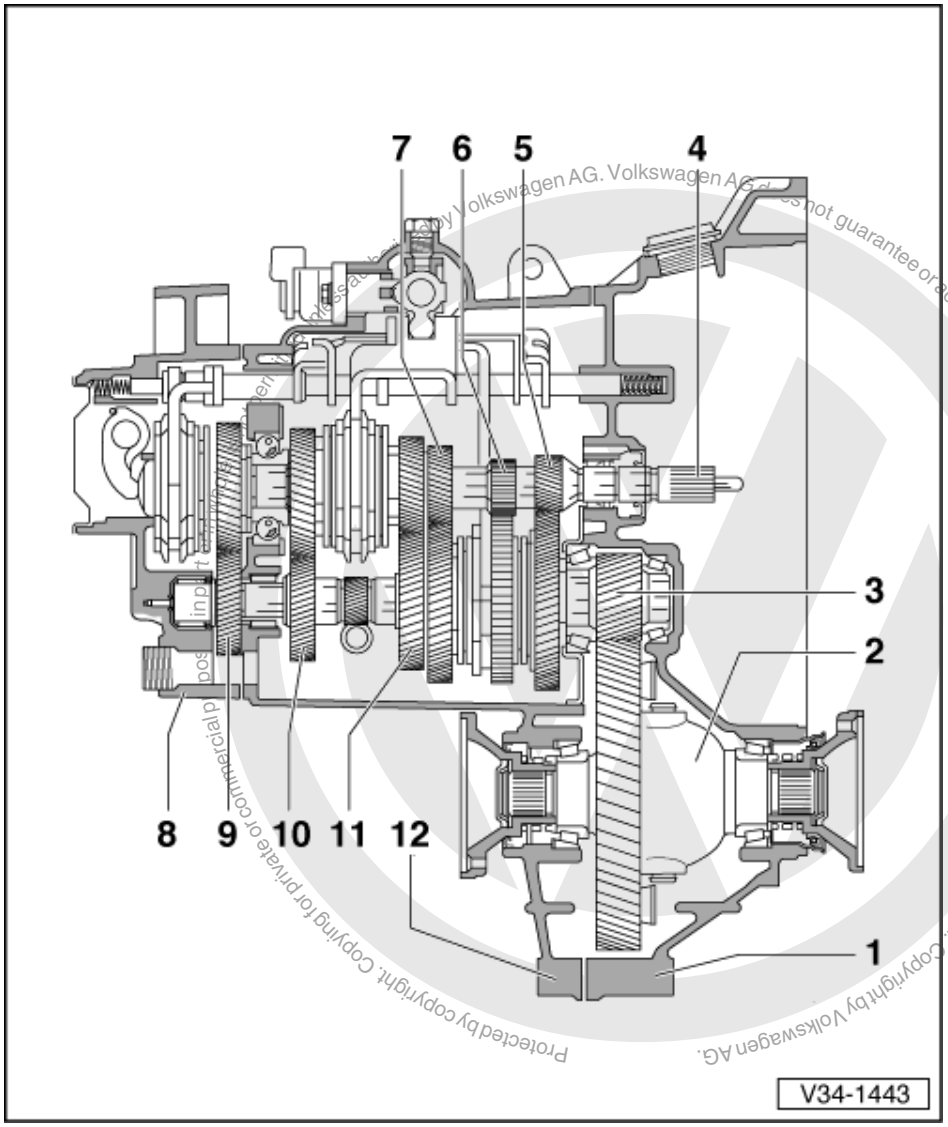

Sequence for assembling => Page 107

4.2 - Overview

1 Clutch housing
- Servicing => Page 134

2 Differential
- Dismantling and assembling => Page 177

3 Output shaft
- Dismantling and assembling => Page 156

4 Input shaft
- Dismantling and assembling => Page 143

5 1st gear

6 Reverse gear

7 2nd gear

satelettronica

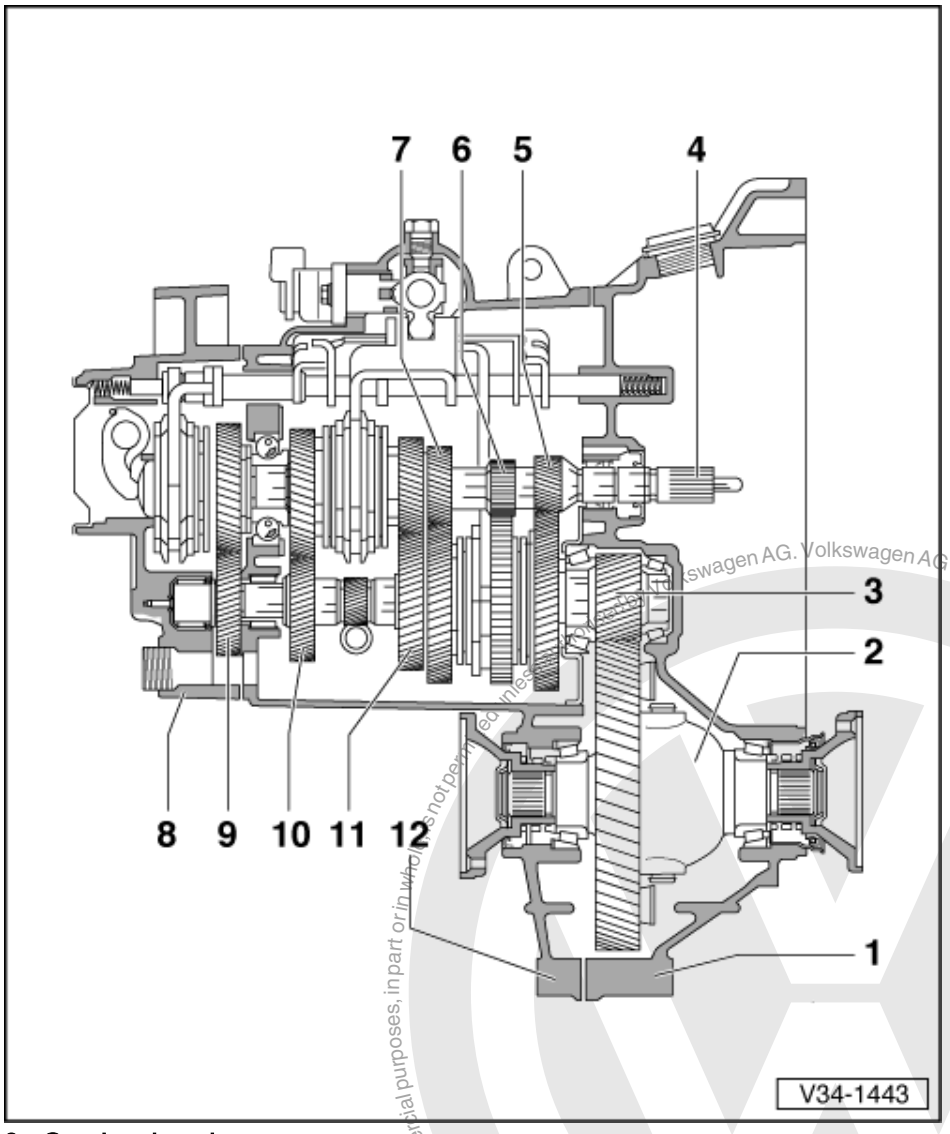

8 Gearbox housing cover
- Servicing => Page 69

9 5th gear

10 4th gear

11 3rd gear

12 Gearbox housing
- Servicing => Page 127

Protected by copyright. Copying for private or commercial purposes, in part or in whole, is not permitted unless authorised by Volkswagen AG. Volkswagen AG does not guarantee or accept any liability with respect to the correctness of information in this document. Copyright by Volkswagen AG.
satelettronica

4.3 - Assembly overview

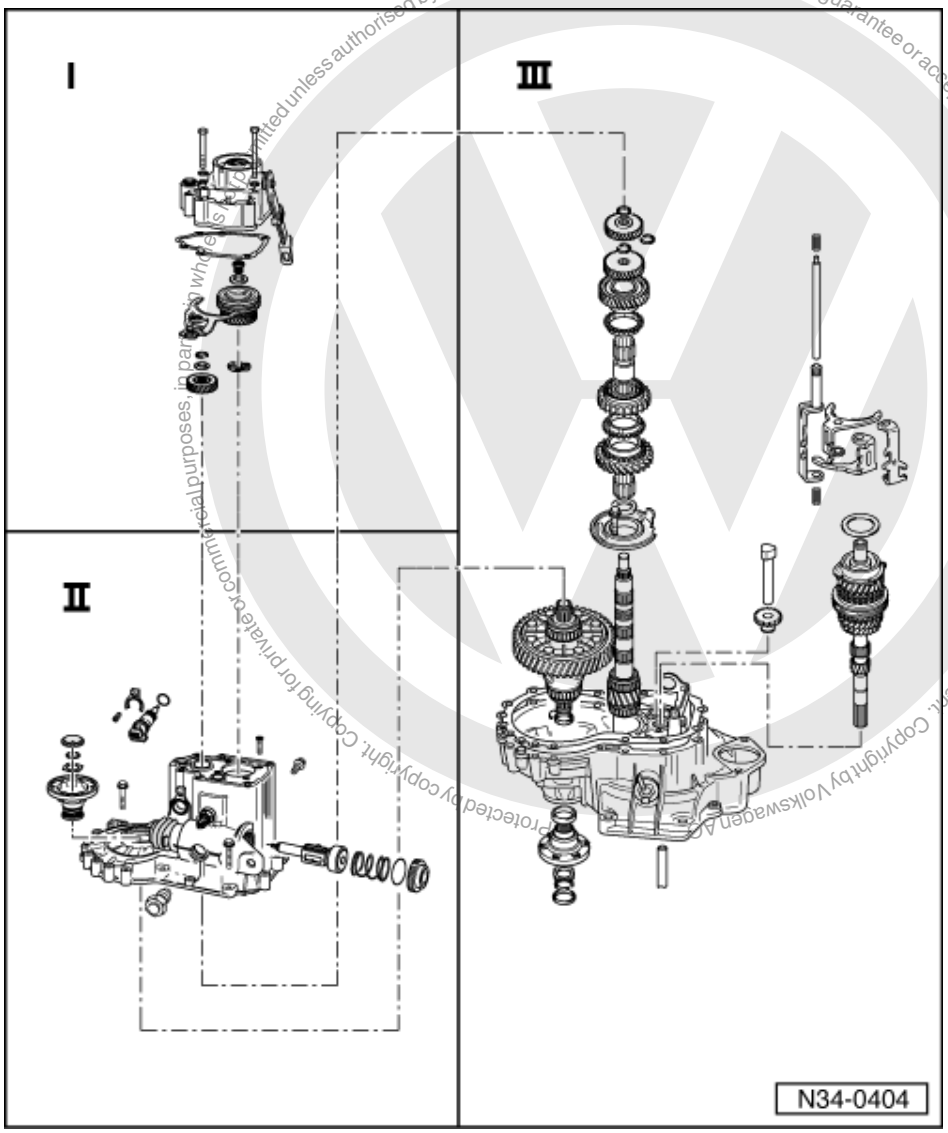

Copyright by Volkswagen AG. Volkswagen AG does not guarantee or accept any liability with respect to the correctness of information in this document. Copyright by Volkswagen AG. Protected by copyright. Copying for private or commercial purposes, in part or in whole, is not permitted unless authorised by Volkswagen AG.

satelettronica

I - Removing and installing gearbox housing cover and 5th gear => Page 95

II - Dismantling and assembling gearbox housing and selector shaft => Page 98

III - Dismantling and assembling input shaft, output shaft, differential and selector forks => Page 101

4.4 - Removing and installing gearbox housing cover and 5th gear

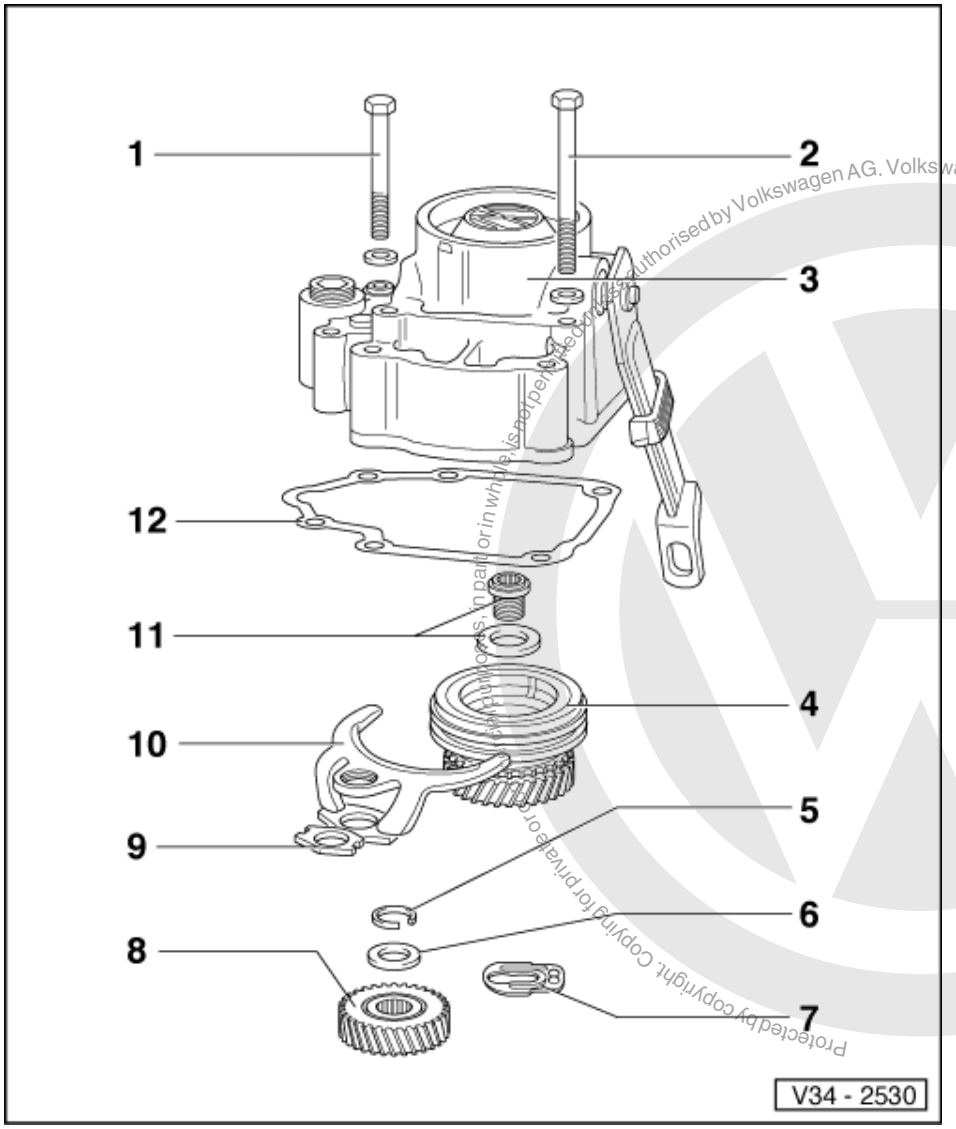

1 Hexagon bolt, M 8 x 62, 25 Nm
- Qty. 2

2 Hexagon bolt, M 8 x 85, 25 Nm
- Qty. 4

3 Gearbox housing cover
- Release shaft modified on vehicles with hydraulic clutch control =>Page 71
- Servicing => Page 69

4 Locking collar/syncro hub for 5th gear with stop ring
- Dismantling and assembling => Page 143

Protected by copyright. Copying for private or commercial purposes, in part or in whole, is not permitted unless authorised by Volkswagen AG. Volkswagen AG does not guarantee or accept any liability with respect to the correctness of information in this document. Copyright by Volkswagen AG.
satelettronica

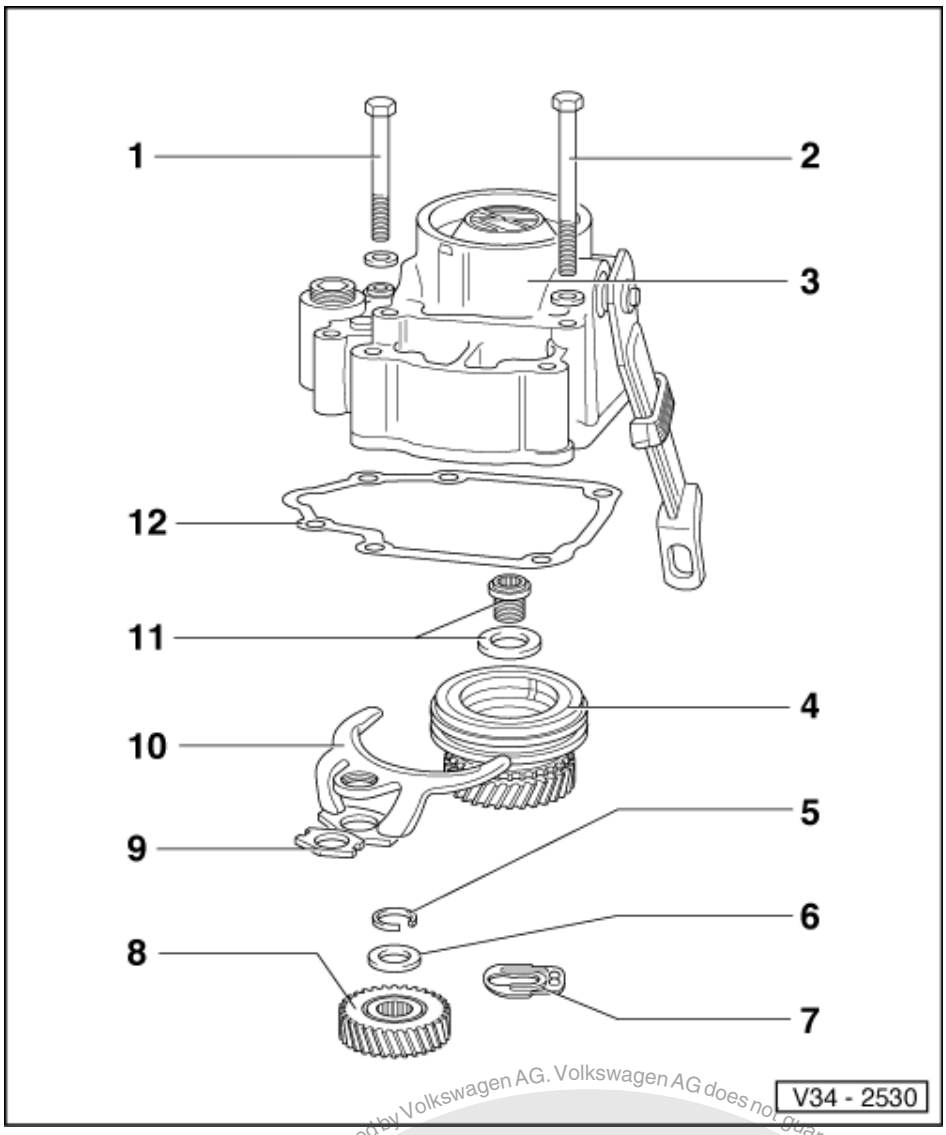

5 Circlip
- Renew
- Vehicles with 2.0 ltr. engine, 5th gear wheel locking mechanism modified => item 7

6 Thrust washer
- Deleted on vehicles with 2.0 ltr. engine

7 Locking plate
- Only install on vehicles with 2.0 ltr. engine

8 5th speed gear wheel
- Installation position:
  Shallow circumferential groove upwards
- Vehicles with 2.0 ltr. engine: deeper circumferential groove upwards

9 Locking plate
- Renew

10 5th gear selector fork
- Adjusting =>from Page 107

satelettronica

Protected by copyright. Copying for private or commercial purposes, in any form and by any means, is not permitted unless authorised by Volkswagen AG. Volkswagen AG does not guarantee or accept any liability with respect to the correctness of information in this document. Copyright by Volkswagen AG.

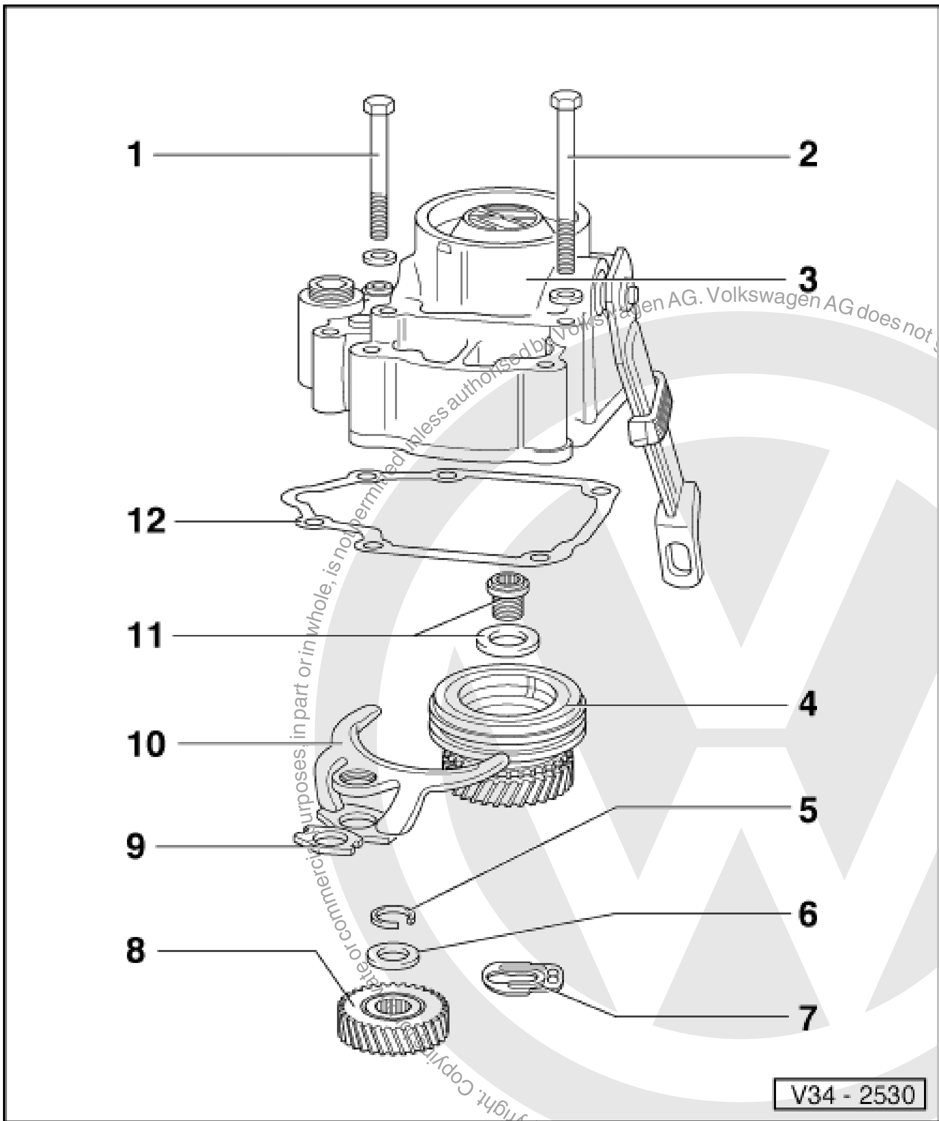

Protected by copyright. Copying for private or commercial purposes, in part or in whole, is not permitted unless authorised by Volkswagen AG. Volkswagen AG does not guarantee or accept any liability with respect to the correctness of information in this document. Copyright by Volkswagen AG.

11 Bolt M17 x 1, 150 Nm

- Renew
- Coat new bolt with locking fluid D 6
- Note sequence when loosening and tightening bolts => from page 107

12 Gasket

- Renew if fitted

satelettronica

4.5 - Removing and installing gearbox housing and selector mechanism

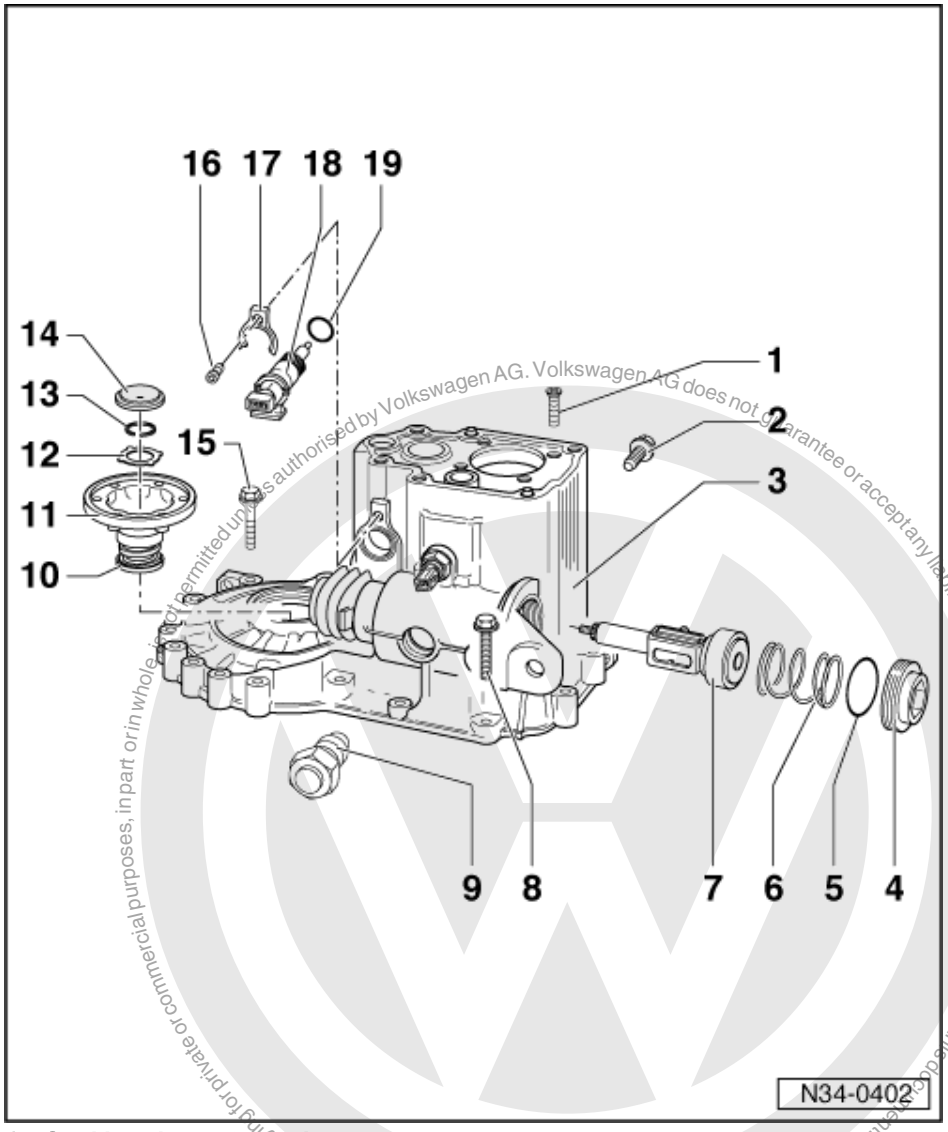

1 Oval head countersunk screw
M7 x 23, 15 Nm
- Qty. 4
- Tensioning plate/grooved ball bearing to gearbox housing

2 Bolt, 20 Nm
- For reverse gear shaft

3 Gearbox housing
- Servicing => Page 127

4 Cover plate, 50 Nm

5 O-ring
- Renew if fitted

Protected by copyright. Copying for private or commercial purposes, in part or in whole, is not permitted unless authorised by Volkswagen AG. Volkswagen AG does not guarantee or accept any liability with respect to the correctness of information in this document. Copyright by Volkswagen AG.

satelettronica

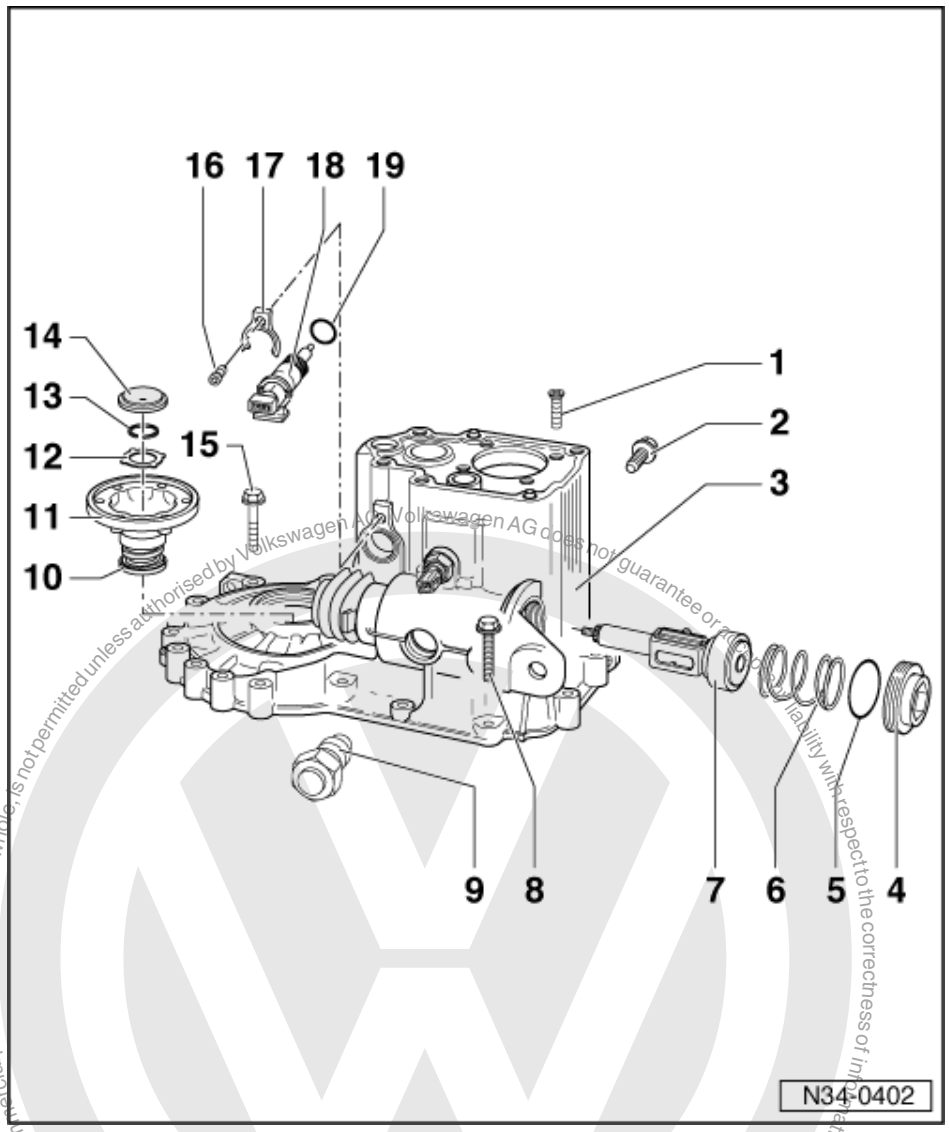

6 Spring
- Press selector shaft and selector lever into gate for 3rd and 4th gear

7 Selector shaft
- Dismantling and assembling => Page 127

8 Hexagon bolt M 8 x 35, 25 Nm
- Qty. 2
- Bolt on below locking bolt (item 9)

9 Selector shaft locking bolt, 40 Nm
- Coat with sealant AMV 188 200 03

10 Spring
- With thrust washer

11 Drive flange
- Removing and installing
  => Page 174

satelettronica

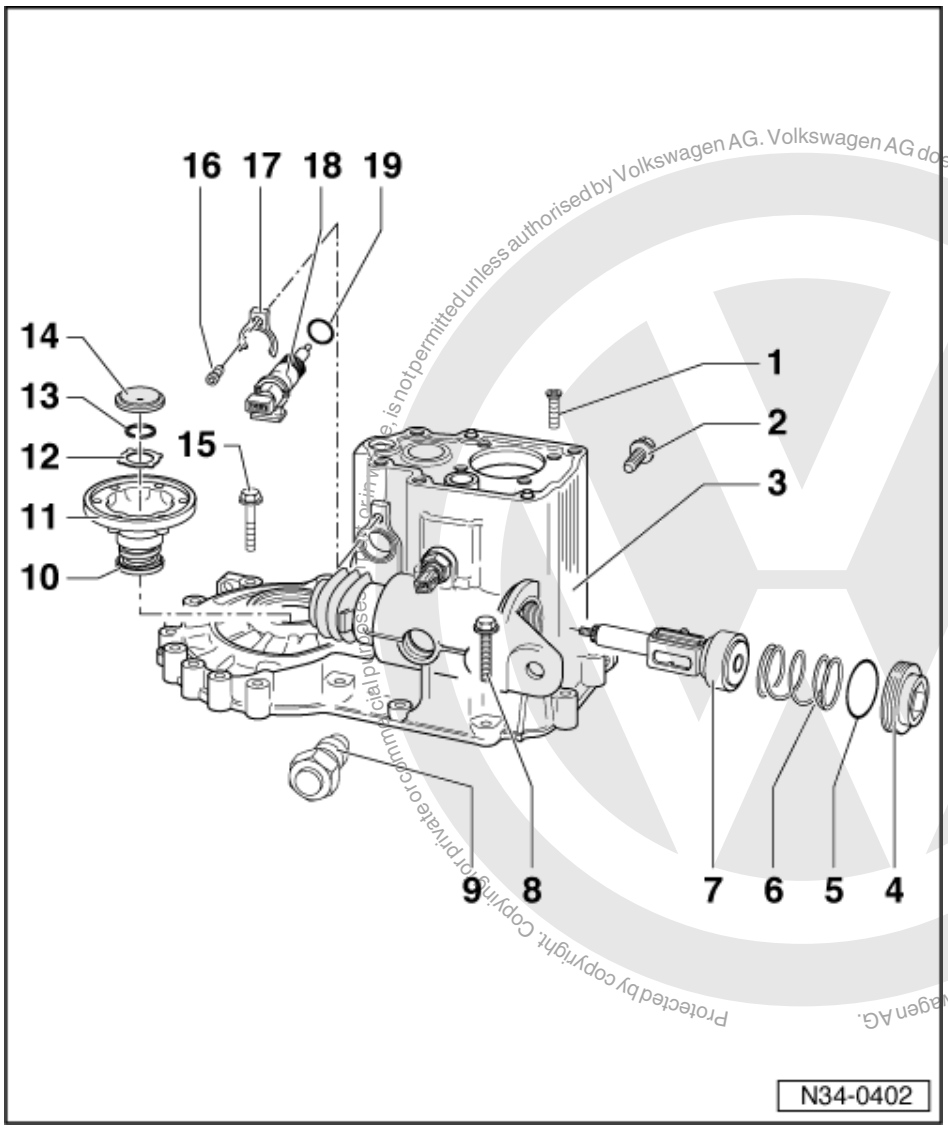

Protected by copyright. Copying for private or commercial purposes, in part or in whole, is not permitted unless authorised by Volkswagen AG. Volkswagen AG does not guarantee or accept any liability with respect to the correctness of information in this document. Copyright by Volkswagen AG.

satelettronica

12 Dished spring
- Cone points towards circlip

13 Circlip
- Always renew

14 Sealing cap
- Destroyed during removal

15 Hexagon bolt M 8 x 52, 25 Nm
- Qty. 12
- Always renew

16 Speedometer drive securing bolt, 5 Nm

17 Bracket

18 Speedometer drive

19 O-ring
- Always renew

4.6 - Removing and installing input shaft, output shaft (pinion shaft), differential and selector forks

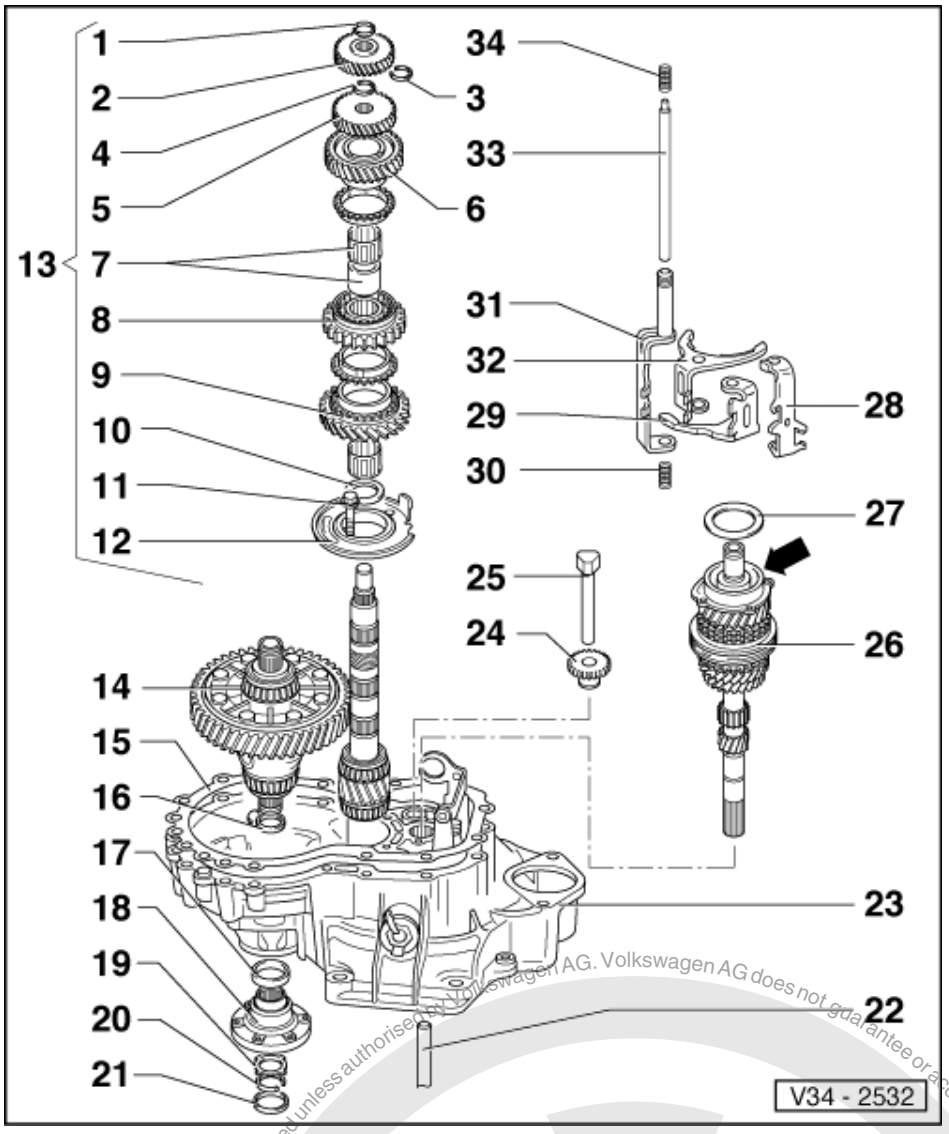

1 Circlip
- Always renew

2 4th gear wheel
- Installation position => from Page 107
  Following changes for 2.0 ltr. engine:
- Inner diameter increased to suit larger output shaft diameter
- Additional securing ring (circlip) => item 3

3 Circlip
- For 4th gear wheel
- Only vehicles with 2.0 ltr. engine

Protected by copyright. Copying for private or commercial purposes, in part or in whole, is not permitted unless authorised by Volkswagen AG. Volkswagen AG does not guarantee or accept any liability with respect to the correctness of information in this document. Copyright by Volkswagen AG.
satelettronica

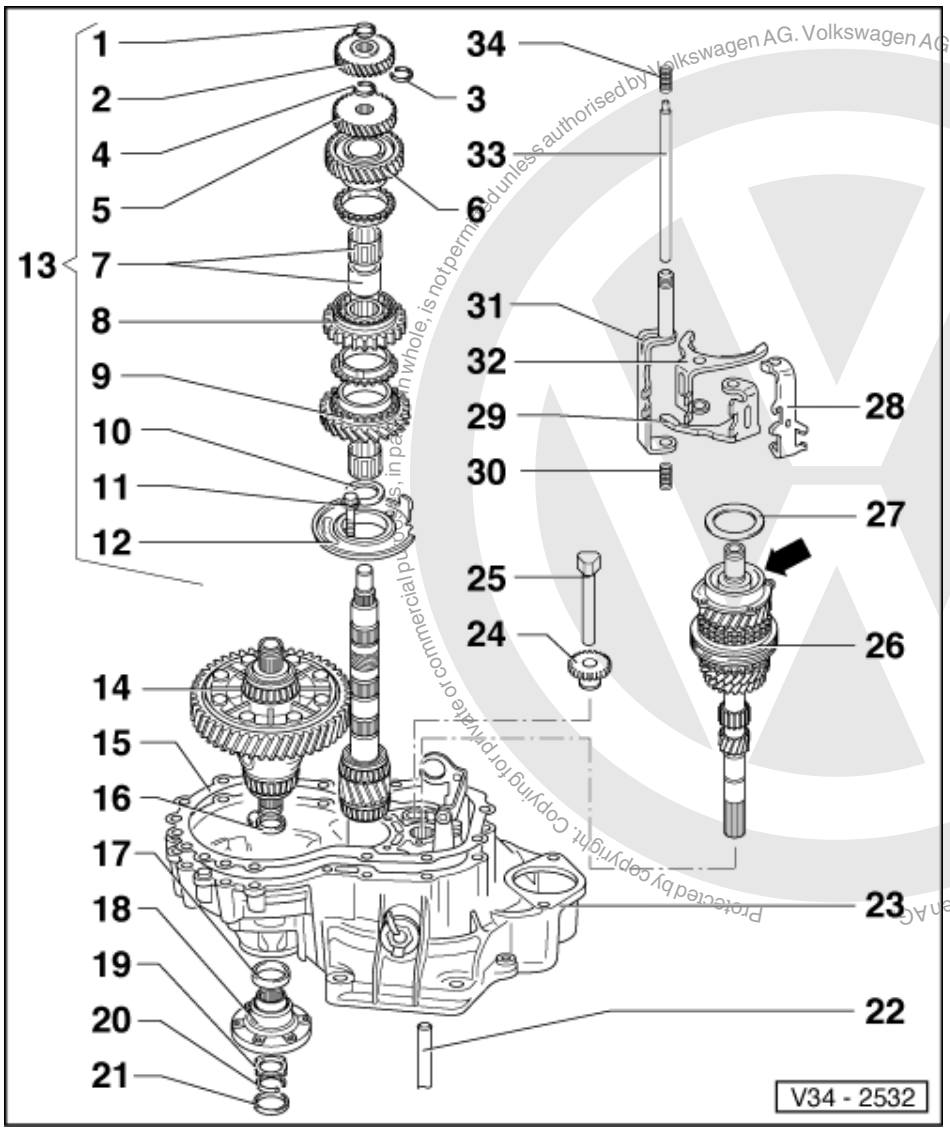

Protected by copyright. Copying for private or commercial purposes, in part or in whole, is not permitted unless authorised by Volkswagen AG. Volkswagen AG does not guarantee or accept any liability with respect to the correctness of information in this document. Copyright by Volkswagen AG.

satelettronica

4 Circlip
- For 3rd gear wheel
- Recalculate thickness => from Page 107
- Vehicles with 2.0 ltr. engine, diameter increased =>from page 107

5 3rd gear wheel
- Installation position => from Page 107
- Adjusting axial play => from Page 107

6 2nd gear sliding wheel

7 Needle roller bearing
- For 2nd gear
- Pulling off inner race => from Page 107
- Pressing on inner race=> from Page 107

8 1st and 2nd gear locking collar with synchro-hub

9 1st gear wheel

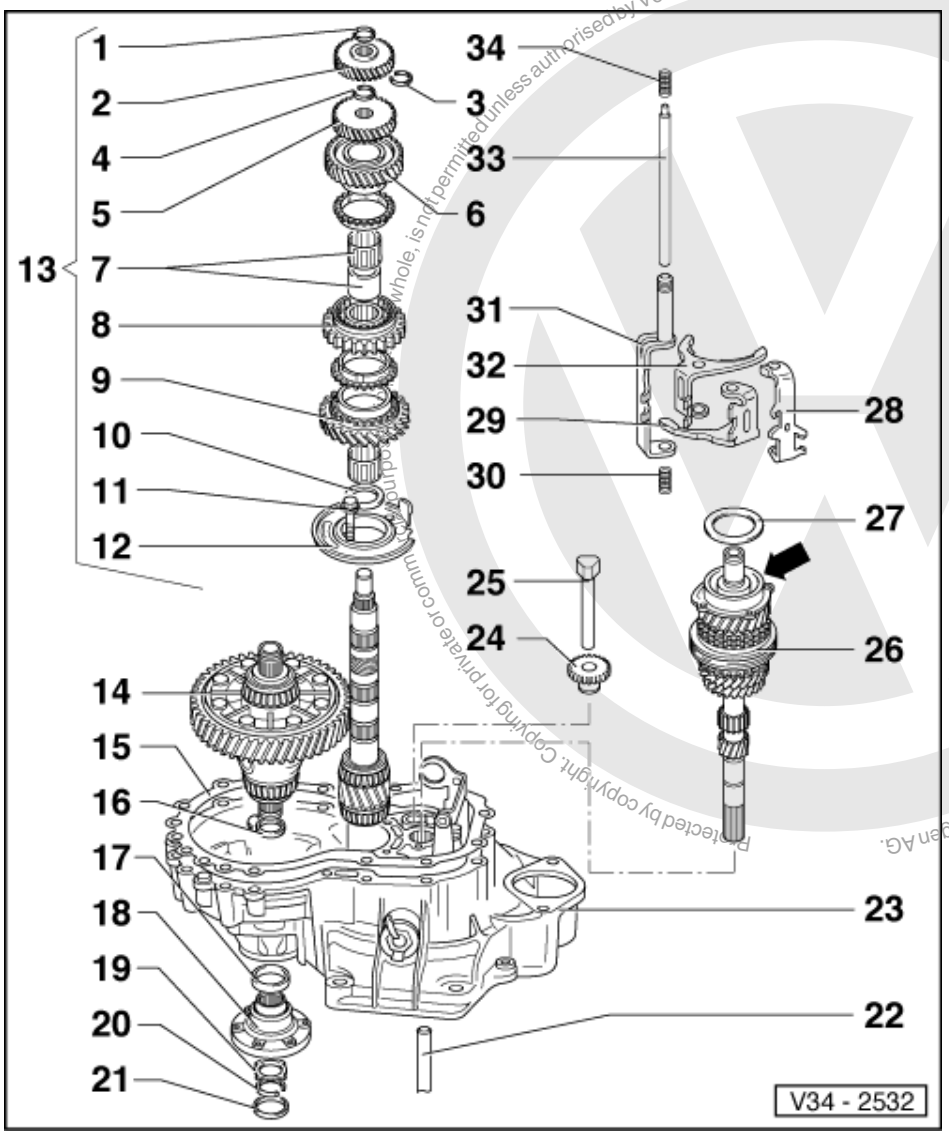

10 Thrust washer
- Installation position => from Page 107

11 Hexagon bolt, 25 Nm then turn 90°further

12 Bearing support
- With large taper roller bearing outer race and stop for reverse gear wheel

13 Output shaft, complete
- Dismantling and assembling => Page 156
- Modified output shaft for vehicles with 2.0 ltr. engine =>Page 169

14 Differential
- Dismantling and assembling => Page 177

15 Gasket
- Renew if fitted

16 Tapered ring

Protected by copyright. Copying for private or commercial purposes, in whole or in part, is not permitted unless authorised by Volkswagen AG. Volkswagen AG does not guarantee or accept any liability with respect to the correctness of information in this document. Copyright by Volkswagen AG.
satelettronica

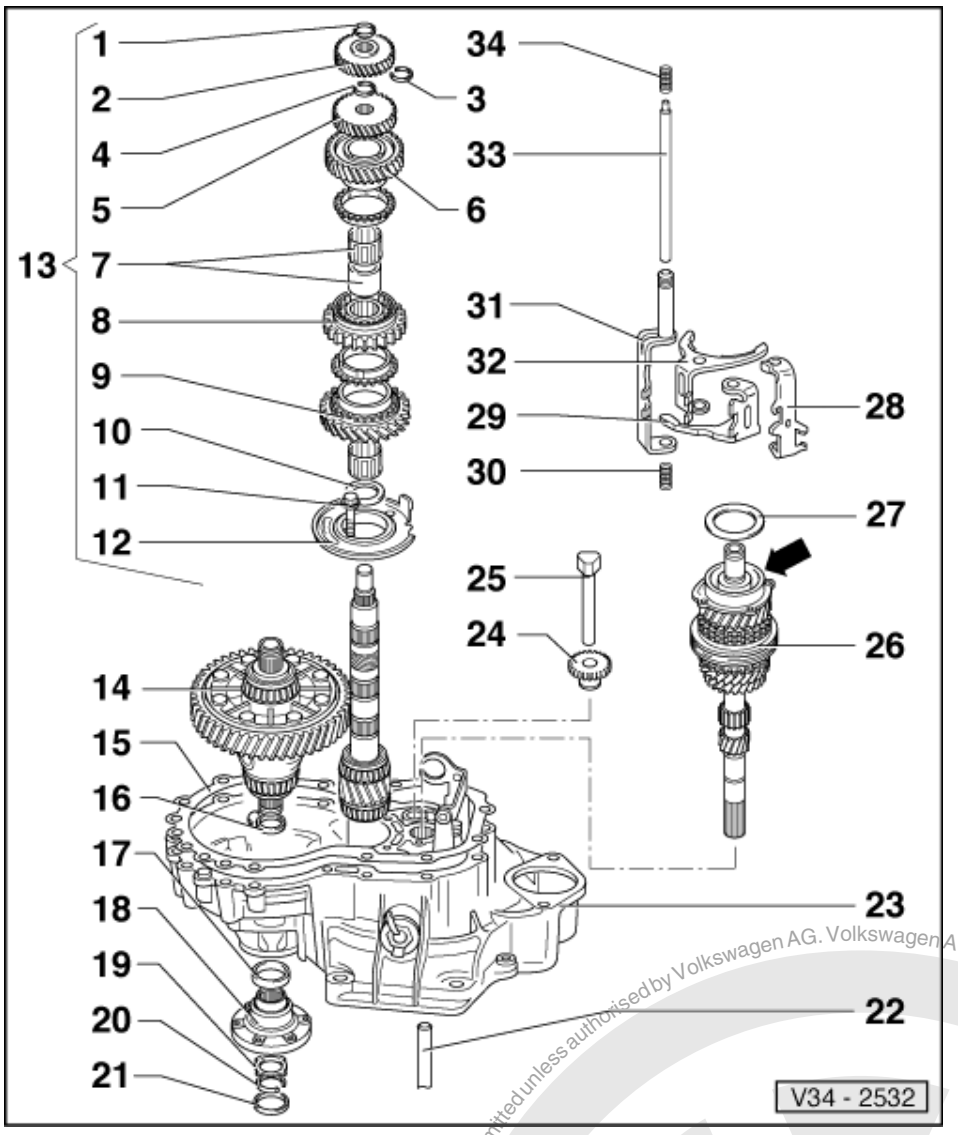

17 Spring
- With thrust washer

18 Drive flange
- Removing and installing => Page 174

19 Dished spring
- Cone points towards circlip

20 Circlip
- Always renew

21 Sealing cap
- Destroyed during removal
- Always renew

22 Clutch push rod

23 Clutch housing
- Servicing => Page 134

24 Reverse gear

25 Reverse gear shaft

Protected by copyright. Copying for private or commercial purposes, in part or in whole, is not permitted unless authorised by Volkswagen AG. Volkswagen AG does not guarantee or accept any liability with respect to the correctness of information in this document. Copyright by Volkswagen AG.
satelettronica

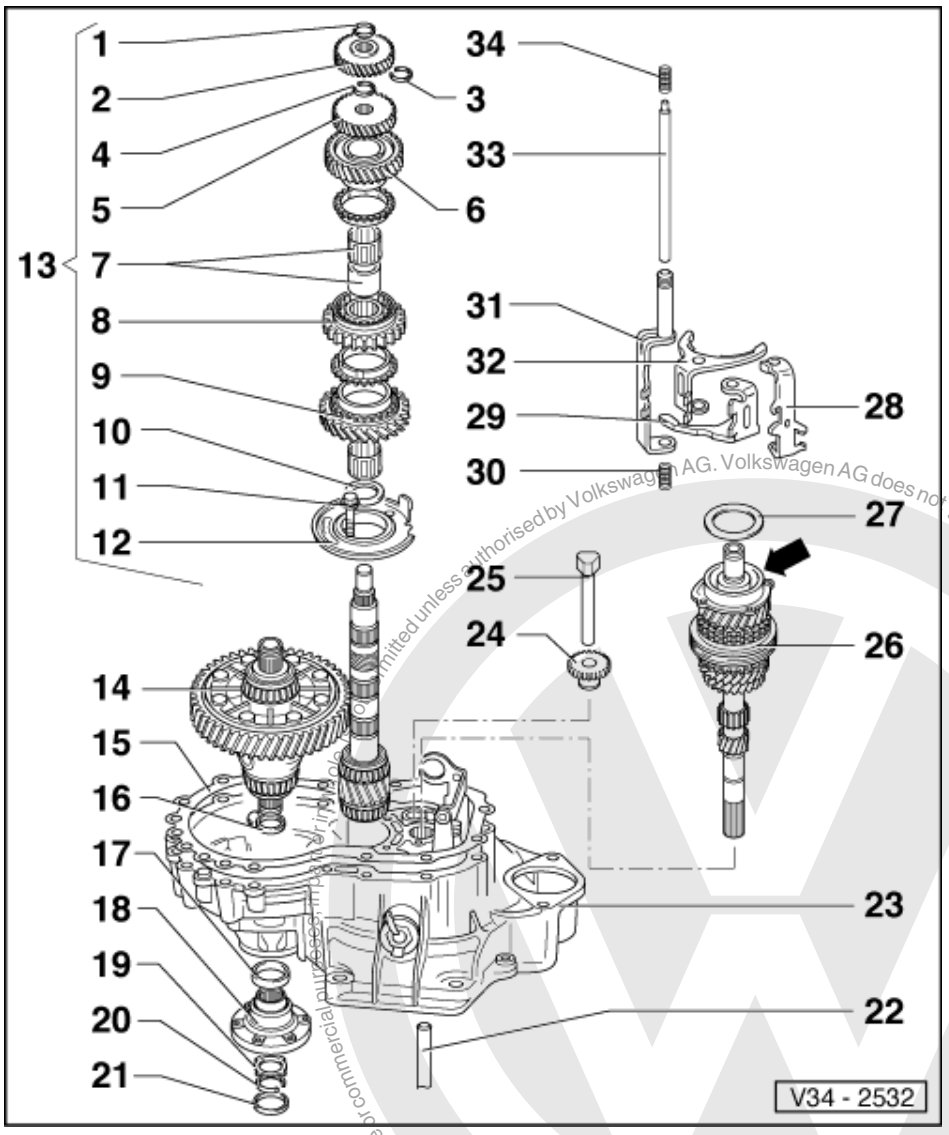

26 Input shaft

- Dismantling and assembling => Page 143
- Modified on vehicles with 2.0 ltr. engine => Page 143
- Pressing off grooved ball bearing (arrow) before installing => from page 143
- Fitting new grooved ball bearing to gearbox housing => from Page 107

27 Shim

- It is not necessary to adjust the input shaft. It is important, however, that the shim determined during production is re-installed after performing repairs. It is also possible that no shim is fitted, in this case reassemble without a shim.
  When replacing the bearing or clutch housing or gearbox housing, it is no longer necessary to insert the shim.

satelettronica

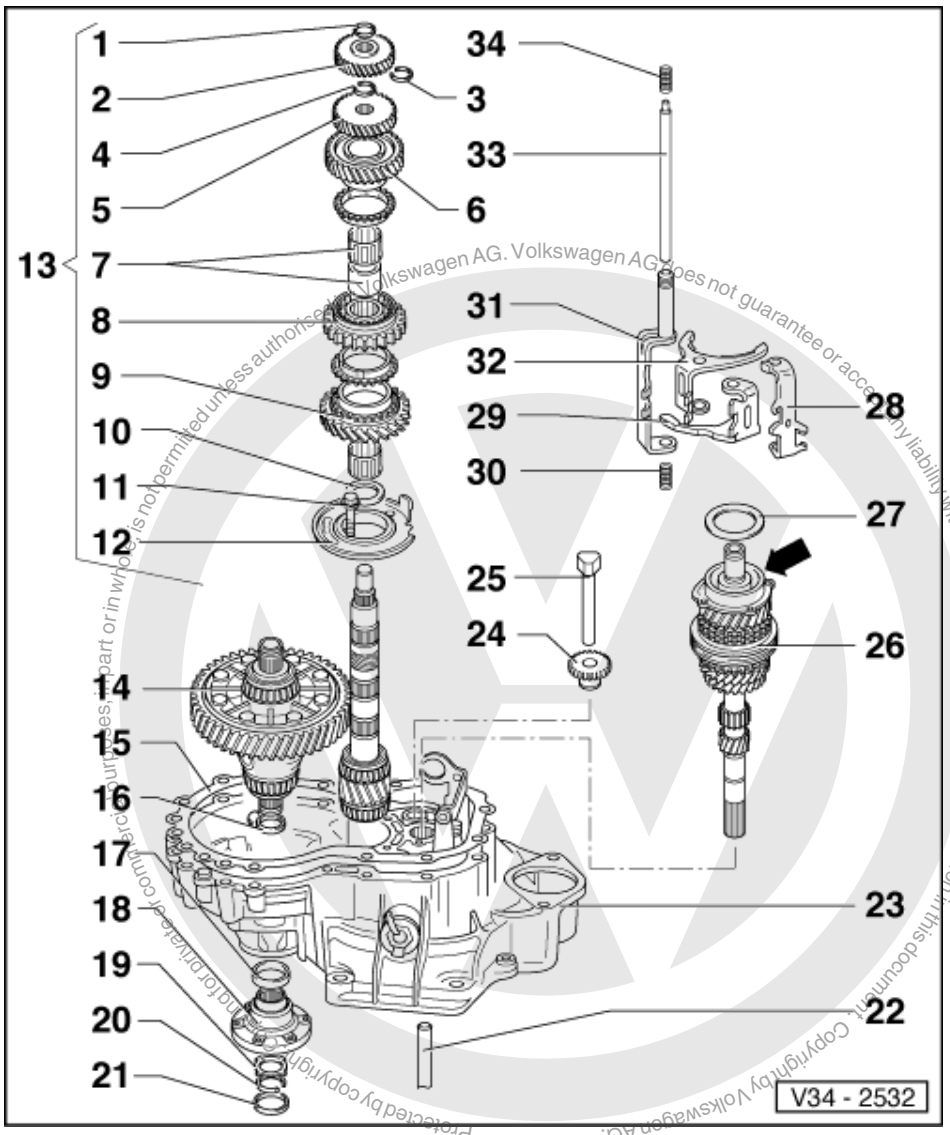

28 Selector fork, reverse gear
29 Selector fork, 1st and 2nd gear
30 Spring
31 Selector bridge with selector tube for 5th gear
32 Selector fork, 3rd and 4th gear
33 Selector rod
34 Spring

satelettronica

4.7 - Dismantling and assembling sequence

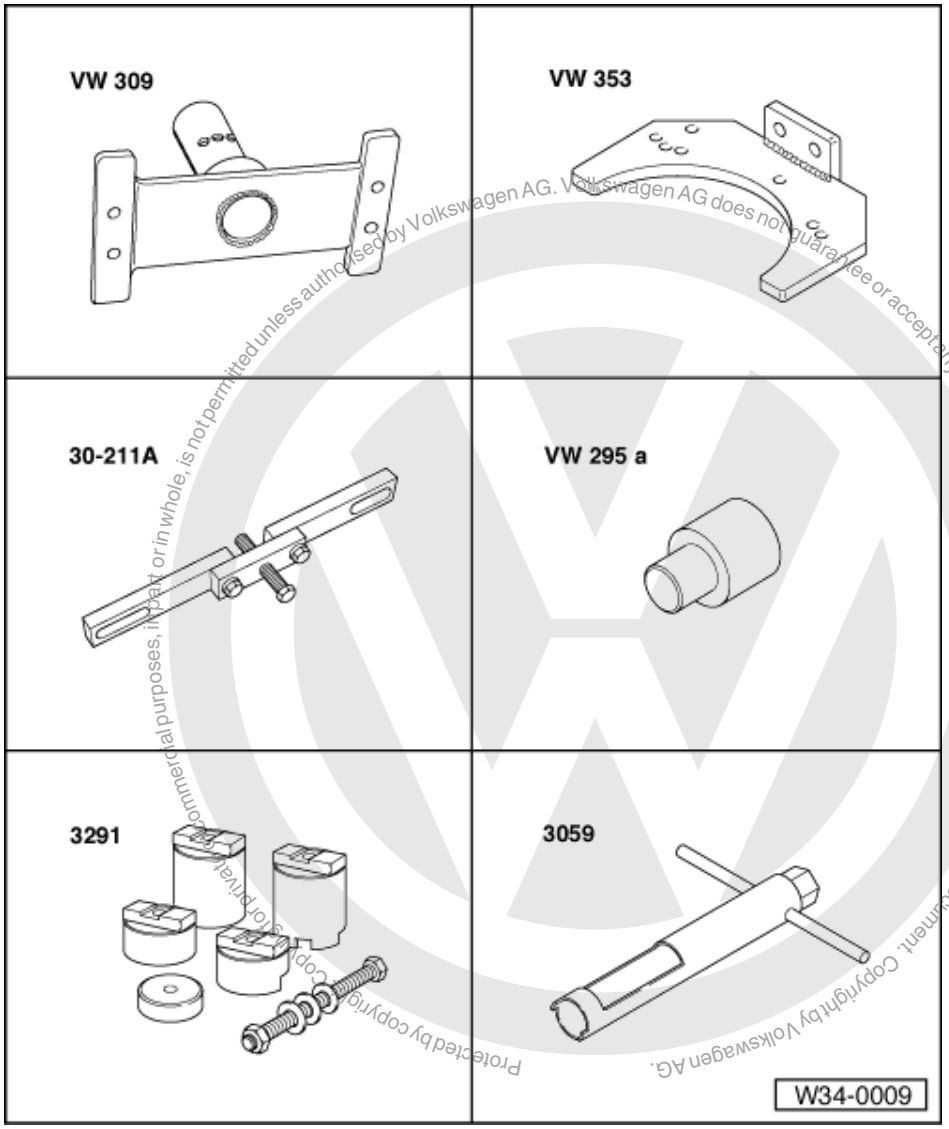

Protected by copyright. Copying for private or commercial purposes, in part or in whole, is not permitted unless authorised by Volkswagen AG. Volkswagen AG does not guarantee or accept any liability with respect to the correctness of information in this document. Copyright by Volkswagen AG.

satelettronica

Dismantling and assembling gearbox housing cover, gearbox housing, selector mechanism, input shaft, output shaft (pinion shaft), differential and selector forks

Special tools and workshop equipment required

- VW 309 Holding plate
- VW 353 Gearbox support
- 30-211 A Support bridge
- VW 295a Adapter
- 3291 Spindle
- 3059 Box wrench

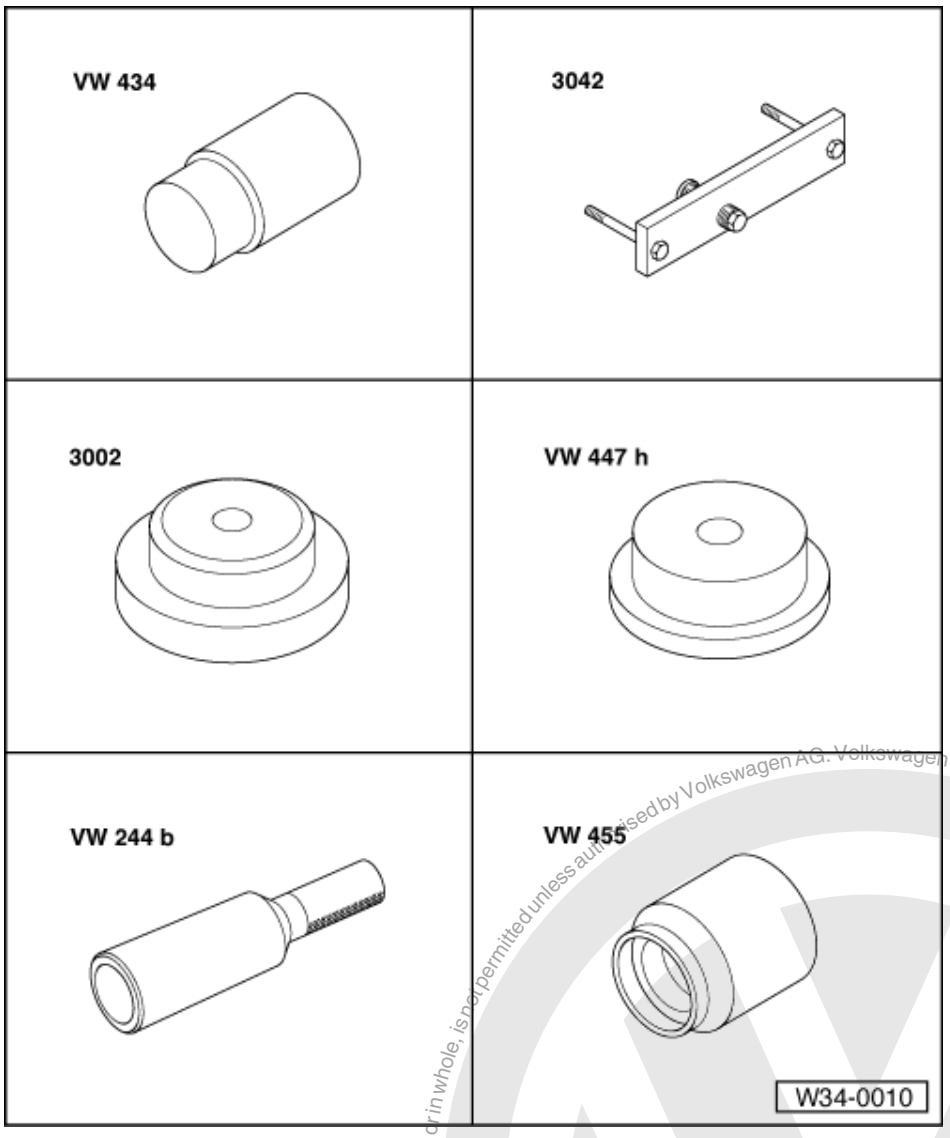

Special tools and workshop equipment required

- VW 434 Press tool
- 3042 Puller
- 3002 Press tool
- VW 447 H Press plate
- VW 244 B Fitting sleeve
- VW 455 Fitting sleeve

Protected by copyright. Copying for private or commercial purposes, in part or in whole, is not permitted unless authorised by Volkswagen AG. Volkswagen AG does not guarantee or accept any liability with respect to the correctness of information in this document. Copyright by Volkswagen AG.
satelettronica

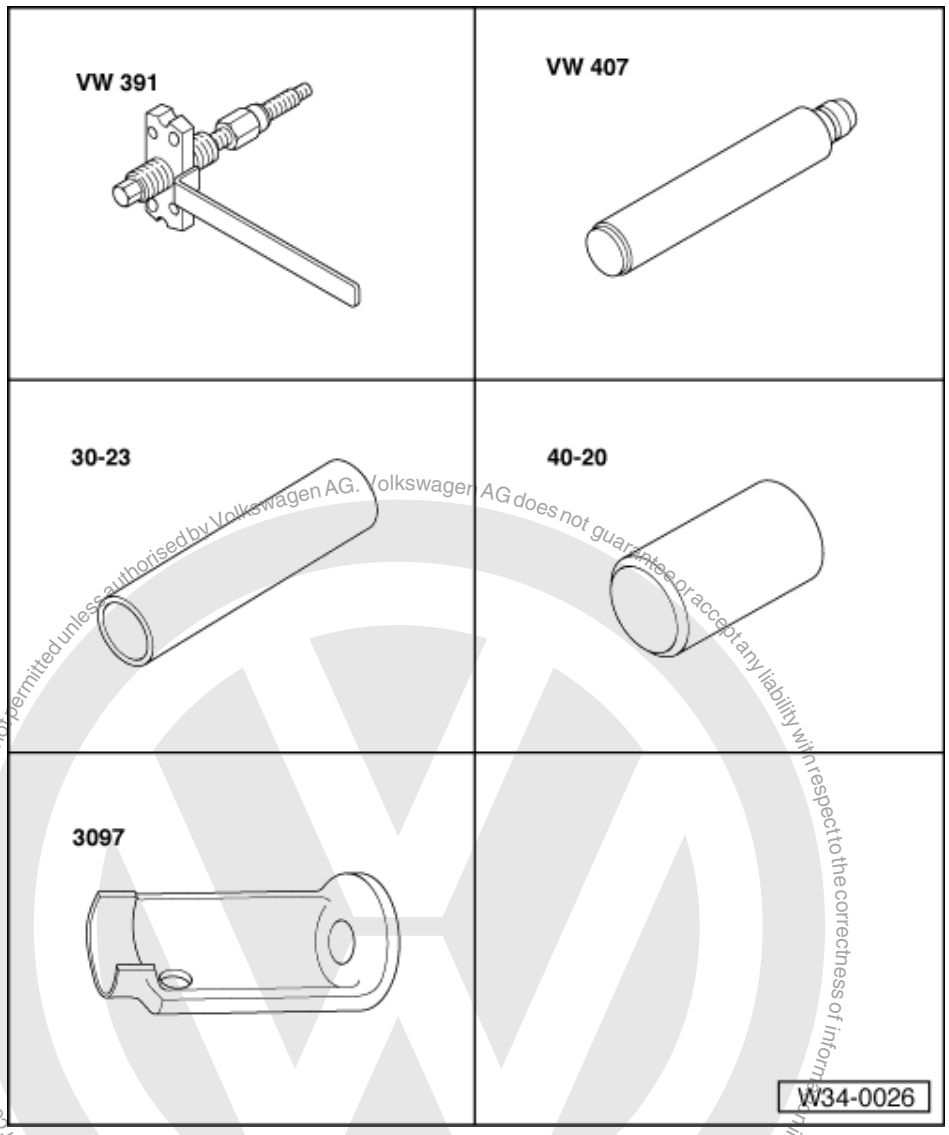

Special tools and workshop equipment required

- VW 391 Drive shaft fitting appliance
- VW 407 Press tool
- 30-23 Extension
- 40-20 Press tool
- 3097 Fitting tool

Protected by copyright. Copying for private or commercial purposes, in part or in whole, is not permitted unless authorised by Volkswagen AG. Volkswagen AG does not guarantee or accept any liability with respect to the correctness of information in this document. Copyright by Volkswagen AG.
satelettronica

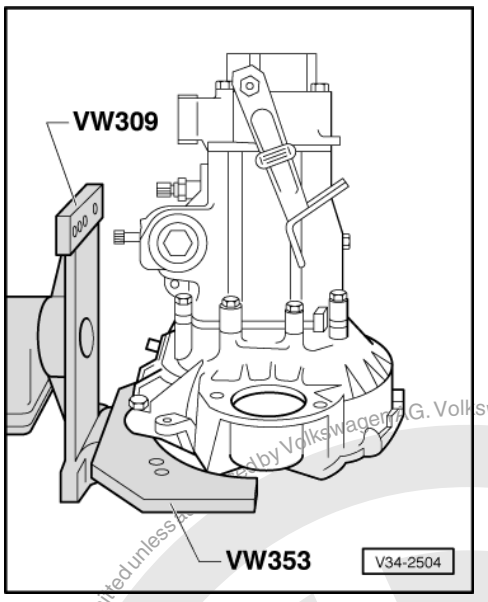

Dismantling

- Drain gearbox oil.
- -> Mount gearbox on repair stand.

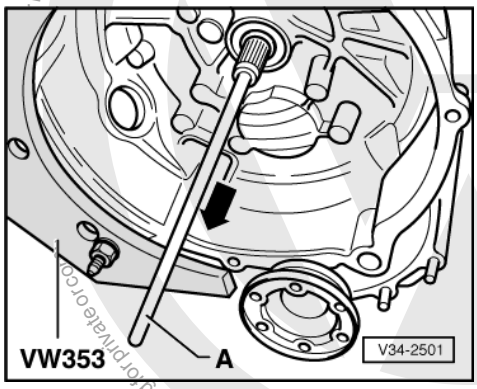

- -> Pulling clutch push rod -A- out from input shaft

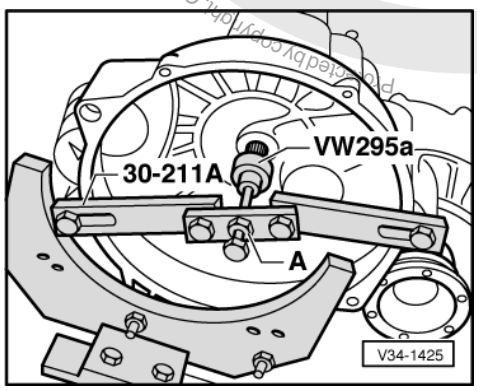

- -> Assemble support bridge 30-211 A for input shaft.

  A - Lock nut M 12

- Lift VW 295 onto stop on input shaft using screw and lock nut -A-.

satelettronica

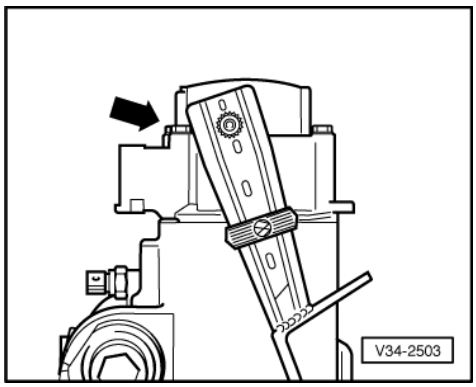

- -> Remove gearbox housing cover (arrow).

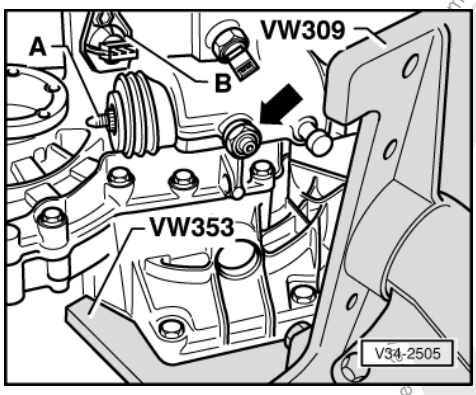

- -> Remove selector shaft locking bolt -A-.
- Remove speedometer drive -B-.

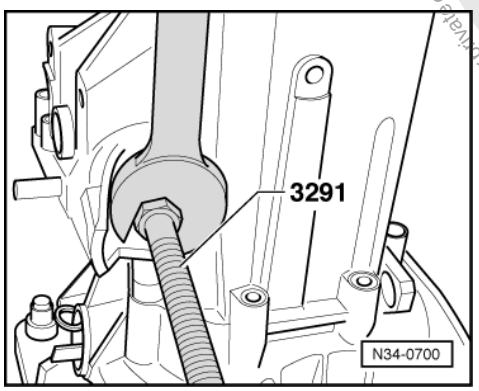

- -> Unscrew selector shaft sealing cover and remove together with spring.
- Bring selector shaft to neutral and pull out from gearbox housing.

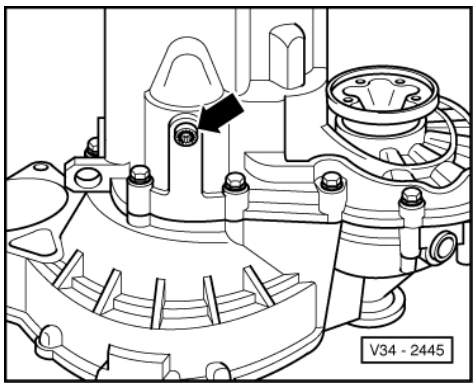

Protected by copyright. Copying for private or commercial purposes, in any form or medium without permission, unless authorised by Volkswagen AG. Volkswagen AG does not guarantee or accept any liability with respect to the correctness of information in this document. Copyright by Volkswagen AG.
satelettronica

- -> Remove Torx bolt (arrow) for securing reverse gear wheel shaft.

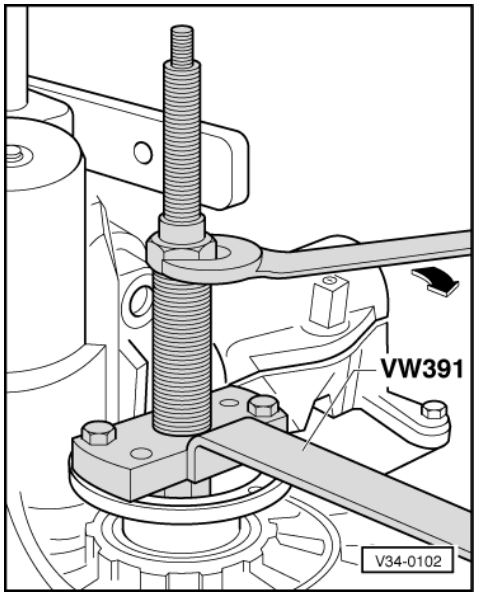

- Pierce sealing cap in left drive flange with a screwdriver and lever out.
- Remove drive flange securing ring and dished spring.
- -> Pull off left drive flange with VW 391.

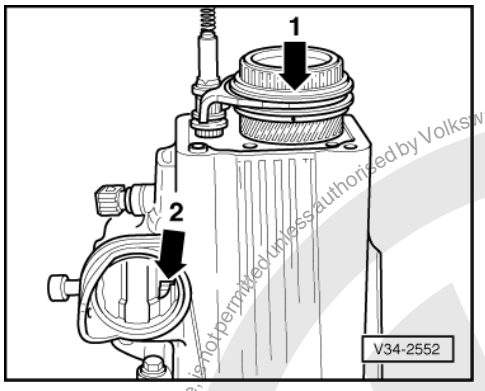

- -> Select 5th gear (arrow 1).
- Select reverse gear (arrow 2) (forward selector jaw facing downwards).

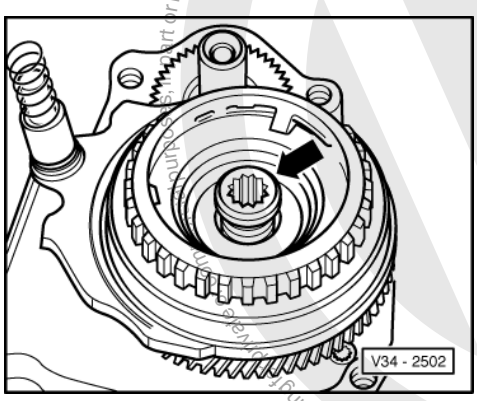

- -> Remove syncro body bolt (arrow) with 12 mm multi-point insert.

satelettronica
Protected by copyright. Copyright by Volkswagen AG.
Copyright by Volkswagen AG. Volkswagen AG does not guarantee or accept any liability with respect to the correctness of information in this document. Copying or in other ways reproduction of this document or in part is not permitted unless authorised by Volkswagen AG.

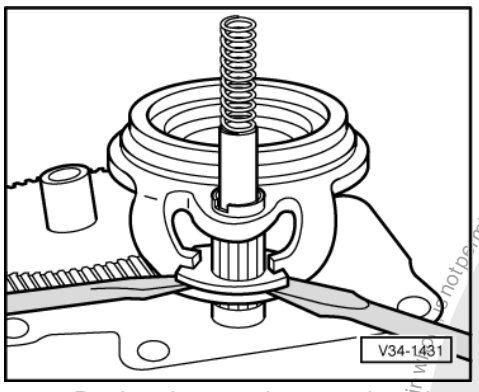

- -> Push selector tube securing plate free.

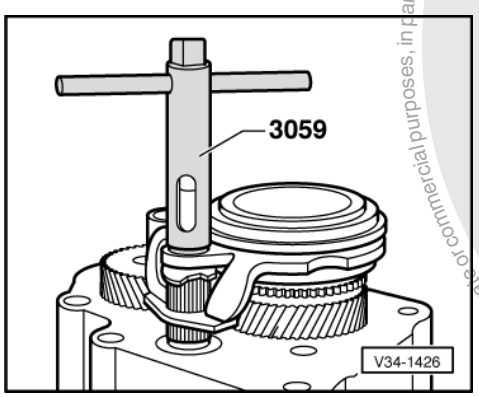

- -> Unscrew selector tube from selector fork - anti-clockwise -.

Note:

Do not pull selector rod out from selector tube.

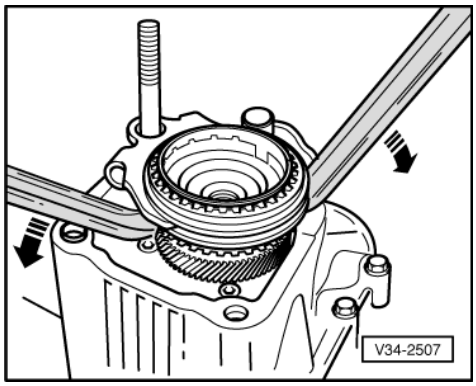

- -> Remove synchro-hub complete with sliding gear wheel and selector fork for 5th gear, prize free slightly with 2 levers if necessary but do not damage housing sealing surfaces.
- Note thrust washer for sliding gear wheel below synchro-hub.

Protected by copyright. Copying for private or commercial purposes, in part or in whole, is not permitted unless authorised by Volkswagen AG. Volkswagen AG does not guarantee or accept any liability with respect to the correctness of information in this document. Copyright by Volkswagen AG.
satelettronica

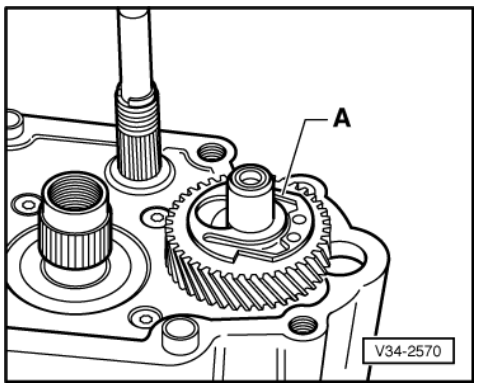

- Take off securing ring and thrust washer for 5th gear wheel.

Note:

5th speed gear wheel secured with a locking plate -A- on vehicles with a 2.0 ltr. engine.

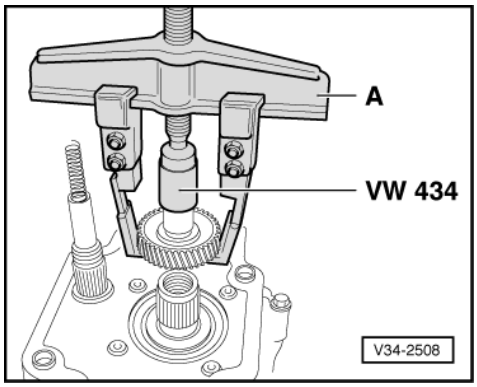

- -> Pull off 5th gear wheel

  A - Two arm puller e.g. Kukko 20/10 with Matra V/170 hooks.

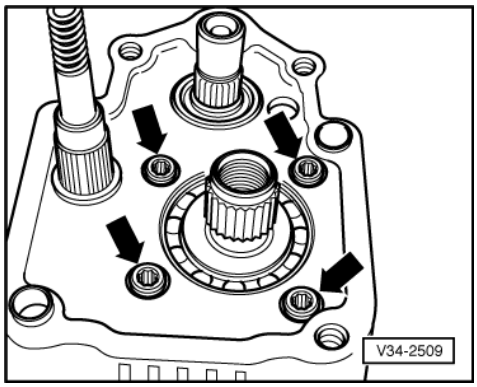

- -> Unbolt tensioning plate (support for input shaft ball bearing) (arrows).
- Remove securing bolts gearbox housing to clutch housing.

Protected by copyright. Copying for private or commercial purposes, in part or in whole, is not permitted unless authorised by Volkswagen AG. Volkswagen AG does not guarantee or accept any liability with respect to the correctness of information in this document. Copyright by Volkswagen AG.
satelettronica

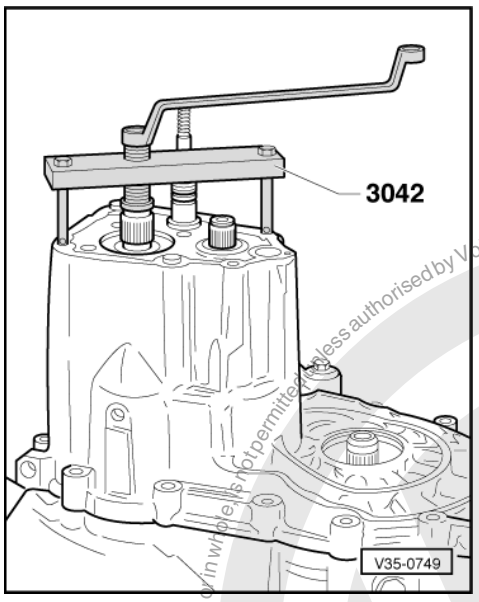

- -> Pull off gearbox housing.

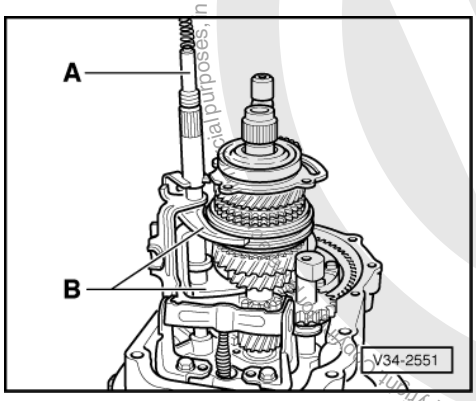

- -> Pull selector rod -A- out of hole in clutch housing and swing out selector forks -B-.

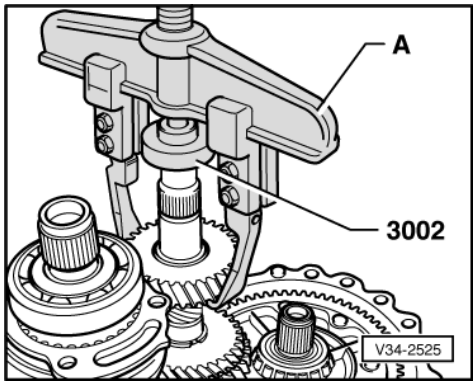

- Remove securing ring for 4th gear/output shaft.
- -> Pull off 4th gear wheel

A - Two arm puller e.g. Kukko 20/10 with Matra V/170 hooks.

Protected by copyright. Copyright by Volkswagen AG.
Volkswagen AG does not guarantee or accept any liability with respect to the correctness of information in this document. Copyright by Volkswagen AG. Reproduction, in part or in whole, is not permitted unless authorised by Volkswagen AG.
satelettronica

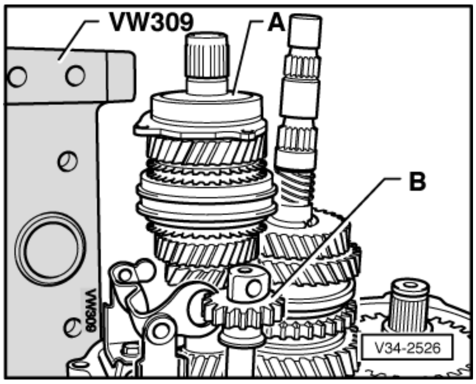

- -> Take out complete input shaft -A-.

Note:

Reverse gear -B- must not be selected.

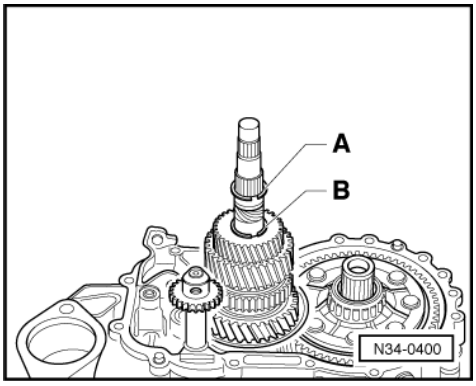

Note:

-> Additional securing ring -A- for 4th gear on vehicles with a 2.0 ltr. engine.

- Take off securing ring before removing 3rd gear wheel.
- Take off securing ring -B- on 3rd gear wheel.

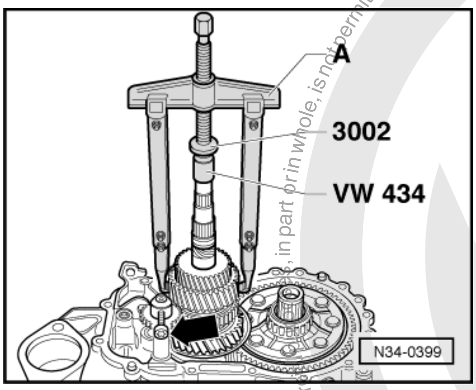

- -> Press off 3rd gear wheel via 2nd gear wheel.

A - Two arm puller e.g. Kukko 20/10 with hooks of 250 mm tensioning depth.

- Take off synchro-ring and needle bearing.
- Drive out reverse gear shaft via screwed-in bolt (arrow) using a synthetic head hammer.
- Take reverse gear out of relay lever.

Protected by copyright. Copying for private or commercial purposes, in part or in whole, is not permitted unless authorised by Volkswagen AG. Volkswagen AG does not guarantee or accept any liability with respect to the correctness of information in this document. Copyright by Volkswagen AG.

sateletronica

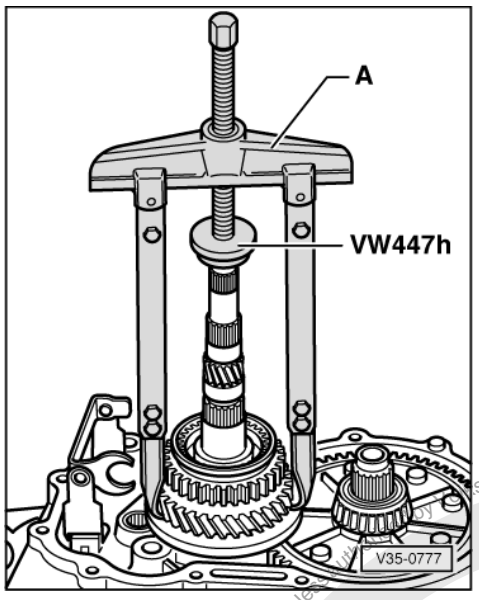

- -> Pull off synchro-hub/locking collar and 1st gear sliding wheel together with 2nd gear needle roller bearing inner race.

  A - Two arm puller e.g. Kukko 20/10 using hooks with a 250 mm tensioning depth.

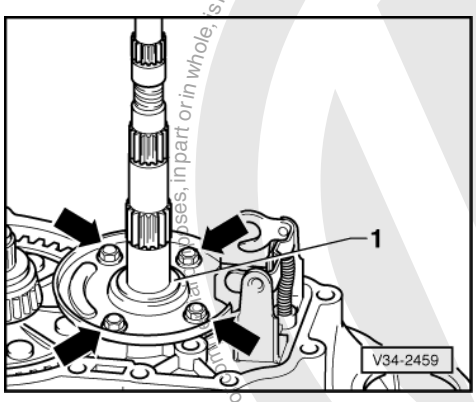

- -> Unbolt bearing support (arrows) and take out output shaft. Note thrust washer -1-.

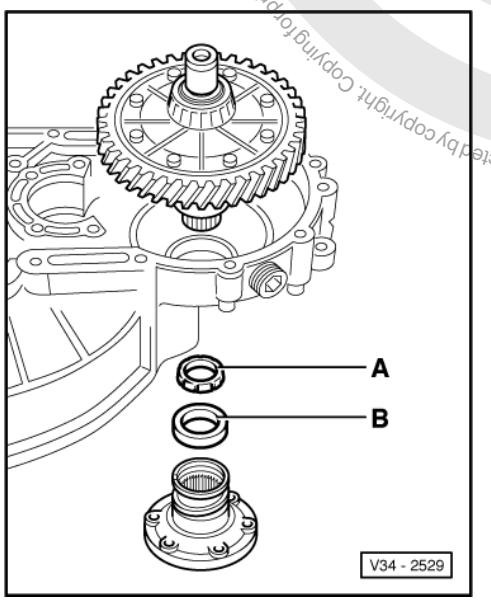

- Remove right drive shaft flange => Page 174 .

Protected by copyright. Copying for private or commercial purposes, in part or in whole, is not permitted unless authorised by Volkswagen AG. Volkswagen AG does not guarantee or accept any liability with respect to the correctness of information in this document. Copyright by Volkswagen AG.
satelettronica

- -> Take out differential, when doing this note tapered ring -A- and thrust washer for drive flange spring.

Assembling

- Install differential.
- Insert output shaft.

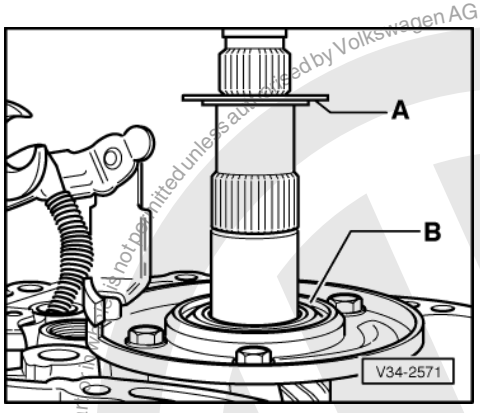

- Tighten nuts for output shaft bearing support.
- -> Installation position of thrust washer for 1st gear sliding wheel needle bearing.

  Shoulder -A- on inner diameter faces towards bearing support -B-.

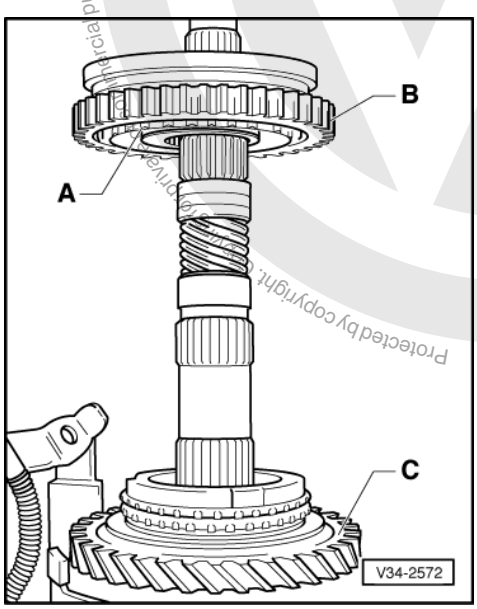

- Fit thrust washer, needle bearing, gear wheel and synchro-ring for 1st gear.
- -> Installation position of 1st/2nd gear locking collar/synchro-hub.

  The identification groove on face end -A- and the locking collar outer splines -B- face towards 1st gear sliding wheel -C-.

Protected by copyright. Copyright by Volkswagen AG. Volkswagen AG does not guarantee or accept any liability with respect to the correctness of information in this document. Copyright by Volkswagen AG.
satelettronica

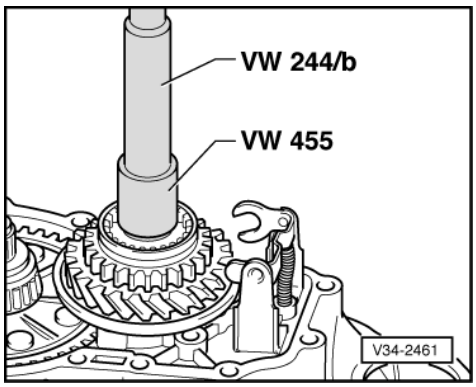

- -> Heat 1st/2nd gear locking collar/synchro-hub to approx. 100 °C, fit and drive onto stop.

  Turn synchro-ring so that the grooves align with the locking pieces.

- Install reverse gear, drive in shaft if necessary.

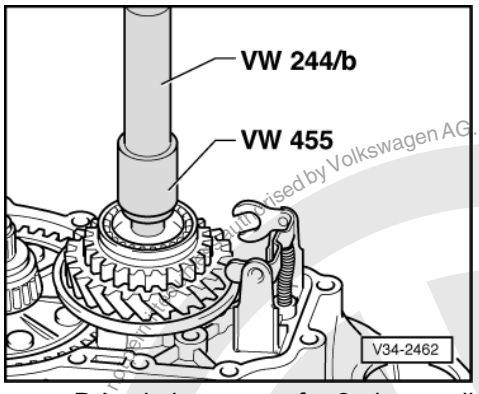

- -> Drive in inner race for 2nd gear sliding wheel needle roller bearing onto stop.

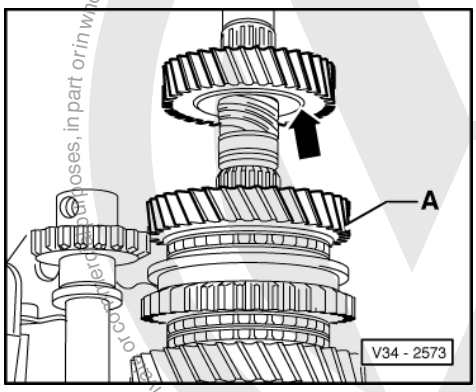

- Fit needle bearing, synchro-ring, sliding wheel for 2nd gear and 3rd gear wheel.

-> Installation position 3rd gear wheel

Collar (arrow) towards 2nd gear sliding wheel -A-

- Drive on 3rd gear wheel onto stop using VW 244 b.

satelettronica

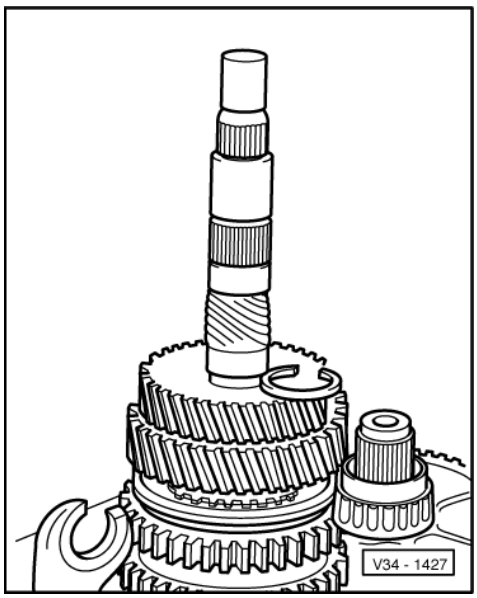

-> Adjust 3rd gear wheel axial play as follows:
- Determine thickest securing ring which can still just be inserted and install.

The following circlips (securing rings) are available:

Part No.	Thickness (mm)	Identification
020 311 381	2.5	Brown
020 311 381 A	2.6	Black
020 311 381 B	2.7	Polished
020 311 381 C	2.8	Copper
020 311 381 D	2.9	Brass
020 311 381 E	3.0	Blue

Note:
Circlip (securing ring) diameter increased on vehicles with 2.0 ltr. engine.

Part No.	Thickness (mm)	Identification
020 311 381 F	2.5	Brown
020 311 381 G	2.6	Black
020 311 381 H	2.7	Polished
020 311 381 J	2.8	Copper
020 311 381 K	2.9	Brass
020 311 381 L	3.0	Blue

Note:
In cases where input shaft has not been dismantled:
Press off input shaft grooved ball bearing => Page 147 item 10

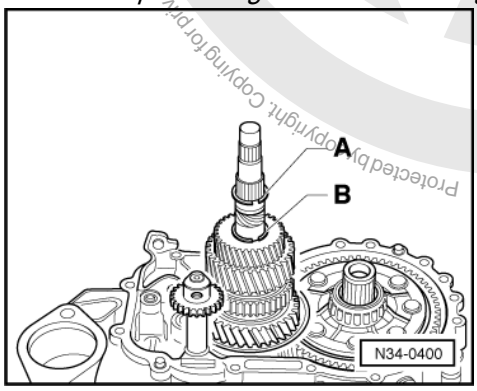

Protected by copyright. Copying for private or commercial purposes, in part or in whole, is not permitted unless authorised by Volkswagen AG. Volkswagen AG does not guarantee or accept any liability with respect to the correctness of information in this document. Copyright by Volkswagen AG.
satelettronica

- Fit complete input shaft but without grooved ball bearing. Input shaft supported by support bridge 30-211 A, additional piece VW 295 a and an M 12 lock nut => from Page 110 .
- -> Fit 4th gear wheel on output shaft using tool 30-23 and secure with securing ring -B-.

Vehicles with 2.0 ltr. engine

- 4th gear wheel with additional securing ring -A-

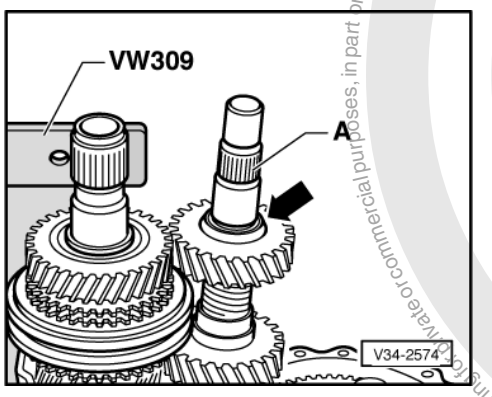

-> Installation position:

Collar (arrow) towards 5th gear splines -A-.

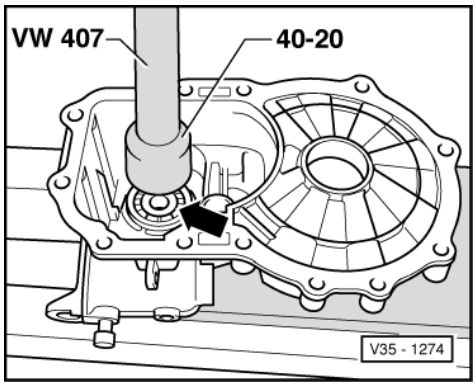

- -> Press on input shaft grooved ball bearing.

Installation position:

Inner race wider collar (arrow) towards insertion tools.

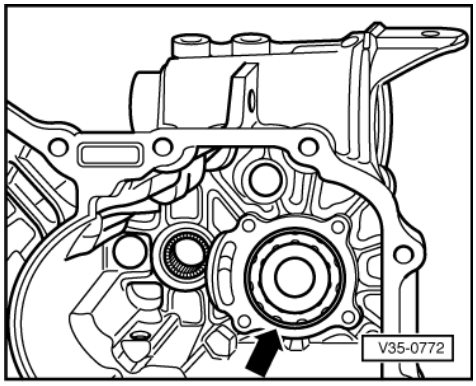

- -> Tighten tensioning plate (arrow) securely.

Protected by copyright. Copyright by Volkswagen AG. Volkswagen AG does not guarantee or accept any liability with respect to the correctness of information in this document. Copyright by Volkswagen AG. Reproduction, distribution or transmission to third parties or other use of this document is not permitted unless authorised by Volkswagen AG. Volkswagen AG does not guarantee or accept any liability with respect to the correctness of information in this document. Copyright by Volkswagen AG.
satelettronica

Note:

Tensioning plate fits only in one position.

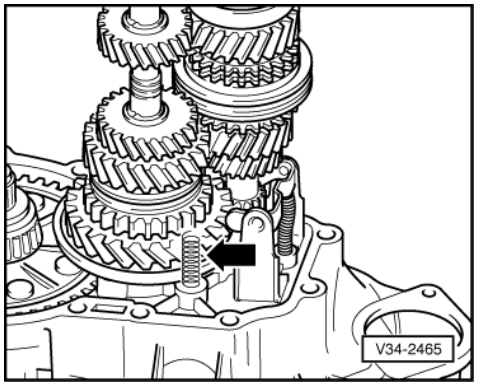

- -> Insert lower spring (arrow) for selector rod into clutch housing.

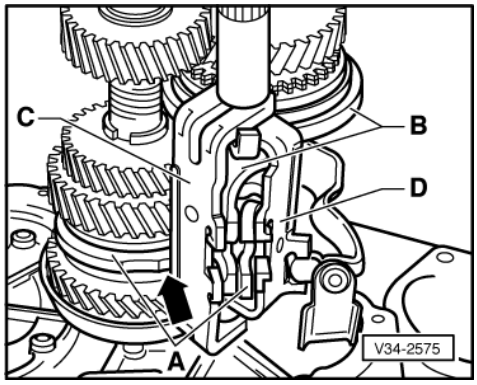

- -> Install selector fork set and align selector jaw.

  A - 1st/2nd gear selector fork
  Arrow faces towards recess for selector bridge -C-
  B - 3rd/4th gear selector fork
  C - Selector bridge with 5th gear selector tube
  D - Reverse gear selector fork

- Insert selector rods

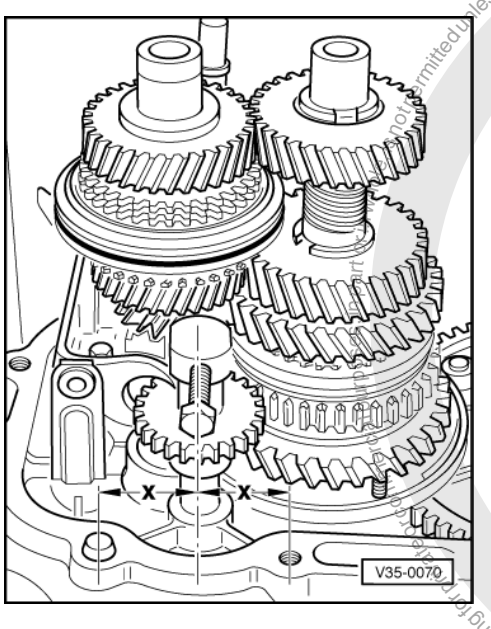

Protected by copyright. Copying for private or commercial purposes, in part or in whole, is not permitted unless authorised by Volkswagen AG. Volkswagen AG does not guarantee or accept any liability with respect to the correctness of information in this document. Copyright by Volkswagen AG.
satelettronica

- -> Align reverse gear wheel shaft.
  Distance x identical.

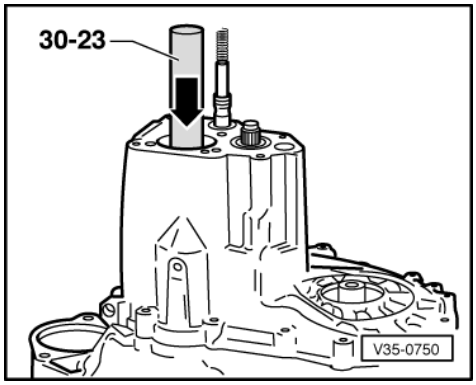

- -> Drive on gearbox housing; first ensure input shaft is properly supported by support bar 30-211 A and additional piece VW 295 a => Page 110 .
- Secure reverse gear wheel shaft.
- Tighten bolts for securing gearbox housing to 25 Nm.

- Retighten tensioning plate countersunk screws for grooved ball bearing to 15 Nm.
- Drive-on 5th gear wheel.

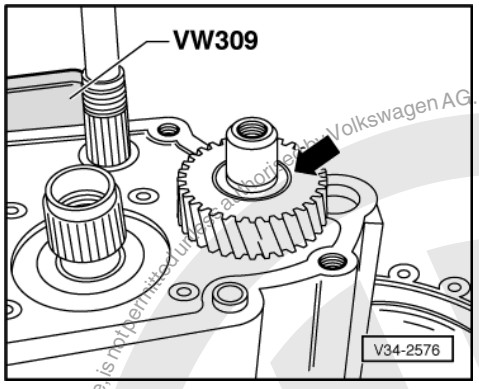

-> Installation position:

Shallow circumferential groove (arrow) upwards. Vehicles with 2.0 ltr.. engine deeper circumferential groove upwards.

- Install thrust washer and securing ring.

Note:

Securing ring for 5th gear on vehicles with 2.0 ltr. engine => Page 114 .

- Fit 5th gear synchro-hub complete with locking collar, 5th gear sliding wheel and selector fork and new securing plate.

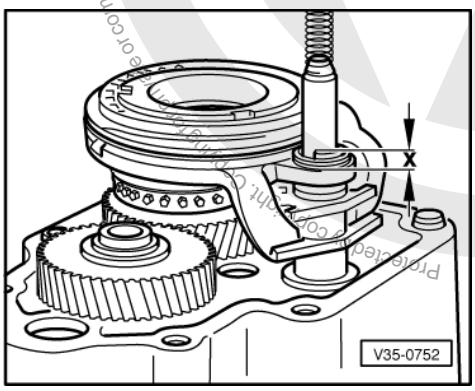

Volkswagen AG. Volkswagen AG does not guarantee or accept any liability with respect to the correctness of information in this document. Copyright by Volkswagen AG.
satelettronica

- Use box spanner 3059 to screw selector tube clockwise into selector fork.
- -> Unscrew selector tube until it projects x = 5.0 mm.

Note:

Do not pull selector rod out of the selector tube (may happen if box spanner is tilted) otherwise the selector forks in the gearbox will fall apart and the gearbox will have to be disassembled. Hold selector rod down, if necessary, with a screwdriver inserted through the side slot when taking box spanner off.

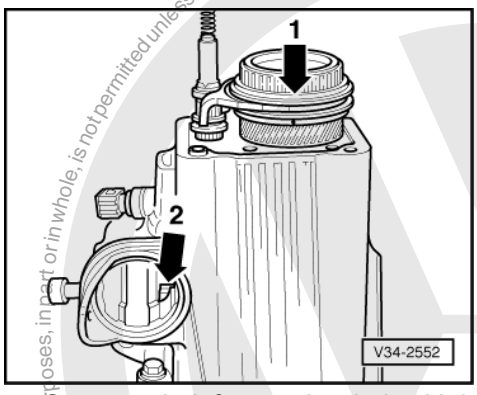

- Coat new bolt for synchro-hub with locking fluid D 000 600 A2 and fit.
- -> Select 5th gear (arrow 1).
- Select reverse gear (arrow 2) (forward selector jaw facing downwards).
- Tighten synchro-hub bolt with a 12 mm multi-point key.

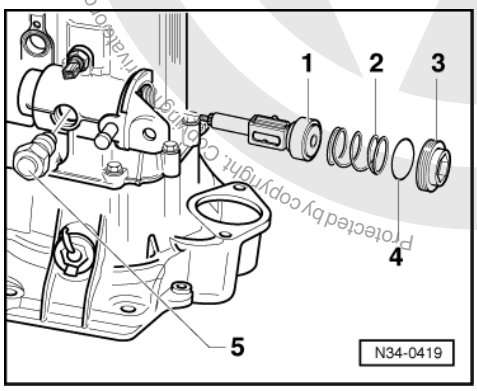

- Move selector forks to neutral position.
- -> Insert selector shaft -1-.
- Insert spring -2- for selector shaft and tighten sealing cover -3-.

Note:

If the sealing cover was sealed with a sealing ring -4-, then this sealing ring must be replaced.

- Insert locking bolt -5- for selector shaft with sealant AMV 188 200 03.

Adjust 5th gear selector fork as follows:

- Perform adjustment with great care so that the possibility of "gears jumping out" is eliminated.

Volkswagen AG. Volkswagen AG does not guarantee or accept any liability with respect to the correctness of information in this document. Copyright by Volkswagen AG. Protected by copyright. Copying for private or commercial purposes, in part or in whole, is not permitted unless authorized by Volkswagen AG.
satelettronica

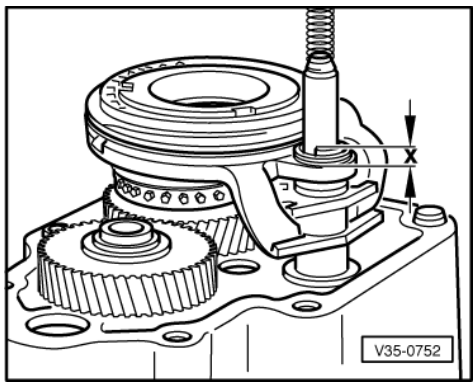

- -> Check projection of selector tube - dimension "x" = 5.0 mm adjust with box spanner 3059, if necessary.
- Bolt selector shaft lever to the selector shaft and engage 5th gear (pull selector shaft fully out and turn to the left).

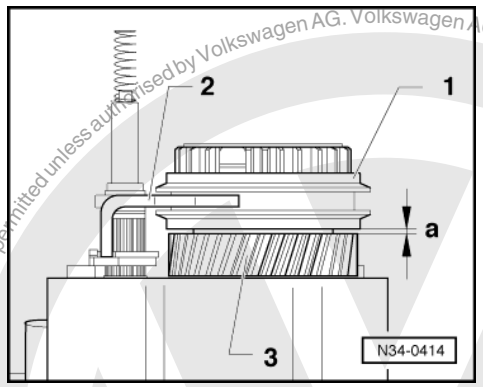

- -> Align locking collar -1- with selector fork -2- so there is no free play to 5th gear selector wheel -3-.

• Check measurement:
The dimension "a" = 1.3 mm must exist between locking collar and sliding wheel. Correct dimension, if necessary by turning the selector tube.

- Disengage 5th gear. Locking collar must now be in the neutral position. Synchro-ring must move freely.

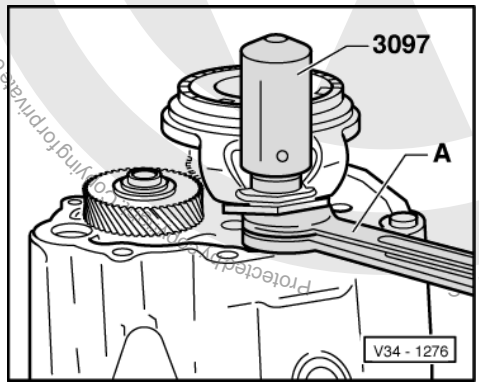

- -> Drive on new locking plate.

Use tools about 12 mm thick to support selector fork e.g. two open jaw spanners (flat) -A- (19 mm and 24 mm).

Protected by copyright. Copying for private or commercial purposes, in part or in whole, is not permitted unless authorised by Volkswagen AG. Volkswagen AG does not guarantee or accept any liability with respect to the correctness of information in this document. Copyright by Volkswagen AG.
satelettronica

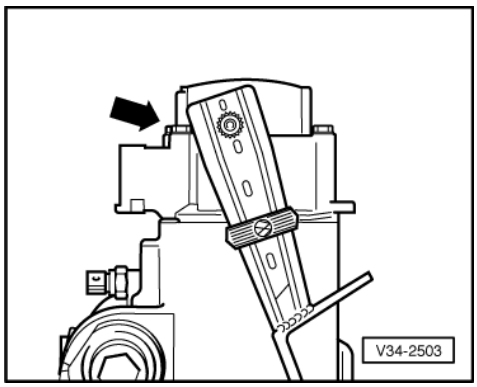

- -> Before fitting the cover (arrow), proceed as follows:
  - Insert clutch push rod into input shaft from 5th gear end, to do this release stress on support bridge for input shaft (=> Page 110 , illustration V 34-1425).
  - Fit release bearing onto clutch push rod.

Note:

Fit gasket first on gearboxes with paper gasket.

- Select all gears.
- Install drive flanges => Page 174 .

Protected by copyright. Copying for private or commercial purposes, in part or whole, is not permitted unless authorised by Volkswagen AG. Volkswagen AG does not guarantee or accept any liability with respect to the correctness of information in this document. Copyright by Volkswagen AG.
satelettronica

5 - Servicing gearbox housing and selector shaft

5.1 - Servicing gearbox housing and selector shaft

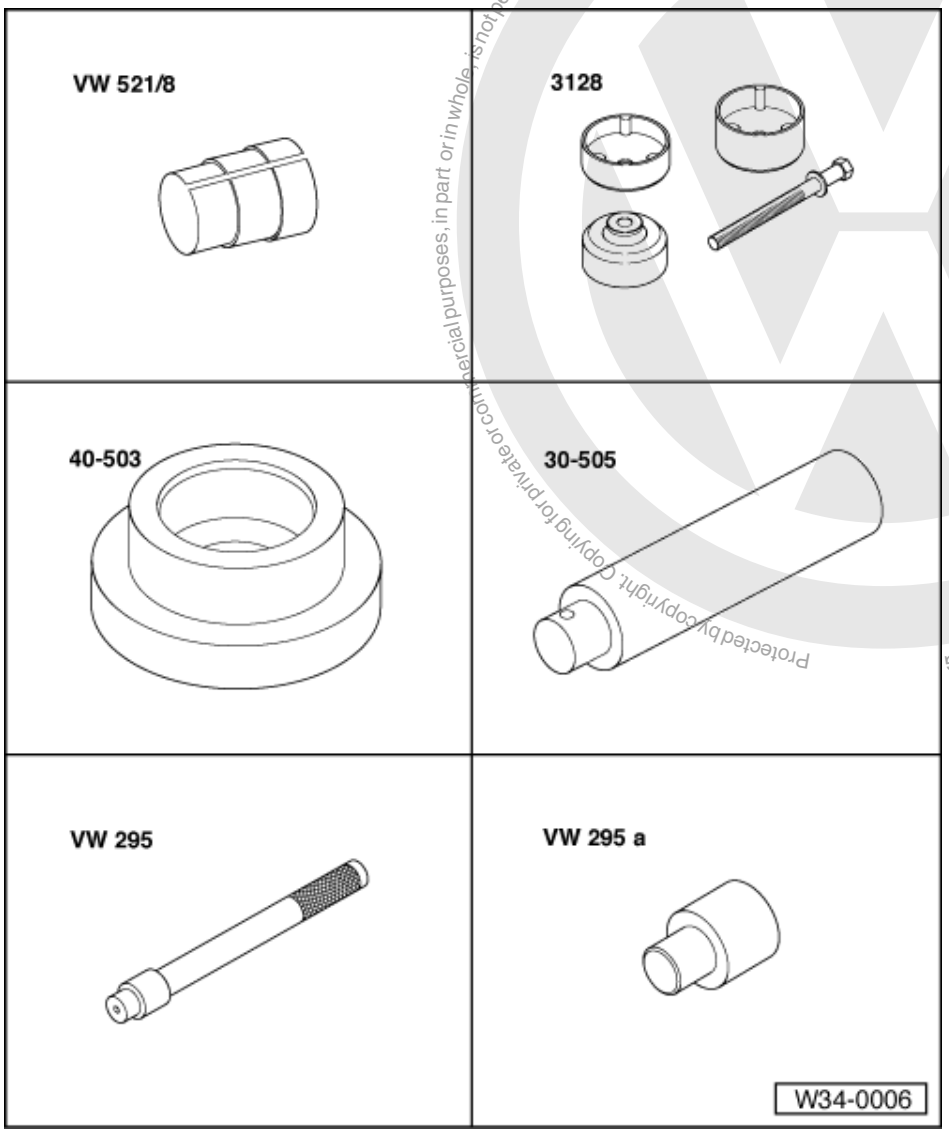

Protected by copyright. Copying for private or commercial purposes, in part or in whole, is not permitted unless authorised by Volkswagen AG. Volkswagen AG does not guarantee or accept any liability with respect to the correctness of information in this document. Copyright by Volkswagen AG.
satelettronica

Special tools and workshop equipment required

- VW 521/8 Adjusting device
- 3128 Puller
- 40-503 Press tool
- 30-505 Mandrel
- VW 295 Drift
- VW 295a Adapter

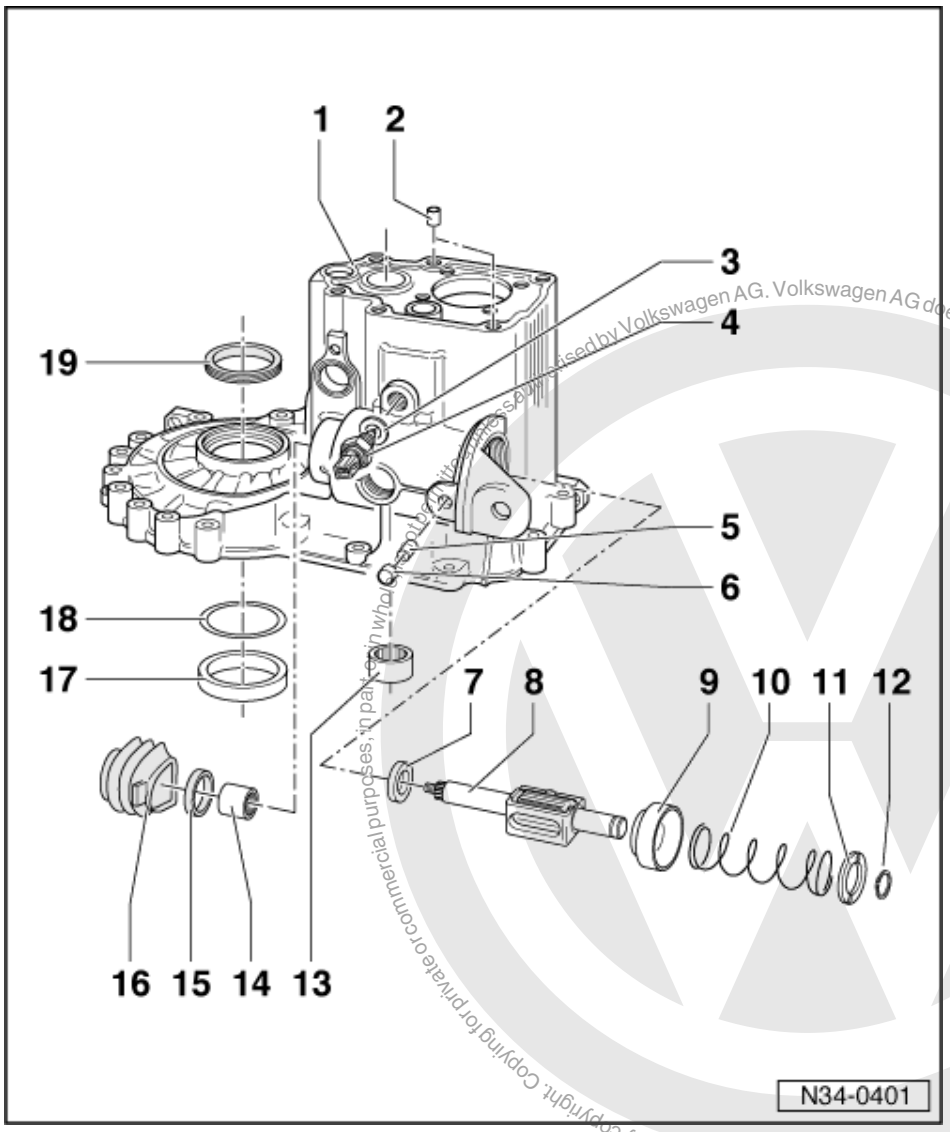

Protected by copyright. Copying for private or commercial purposes, in part or in whole, is not permitted unless authorised by Volkswagen AG. Volkswagen AG does not guarantee or accept any liability with respect to the correctness of information in this document. Copyright by Volkswagen AG.
satelettronica

1 Gearbox housing
- If replaced: Adjust differential => Page 190

2 Dowel sleeve
- (Qty. 2)

3 Oil seal
- Always renew

4 Reversing light switch, 20 Nm

5 Sleeve
- Remove using pliers
- Knock-in onto stop

6 Cap
- For gearbox breather

7 Lock piece
- Only installed to 4 speed gearboxes

Copyright by Volkswagen AG. Volkswagen AG does not guarantee or accept any liability with respect to the correctness of information in this document. Copyright by Volkswagen AG. Protected by copyright. Copying for private or commercial purposes, in part or in whole, is not permitted unless authorised by Volkswagen AG.

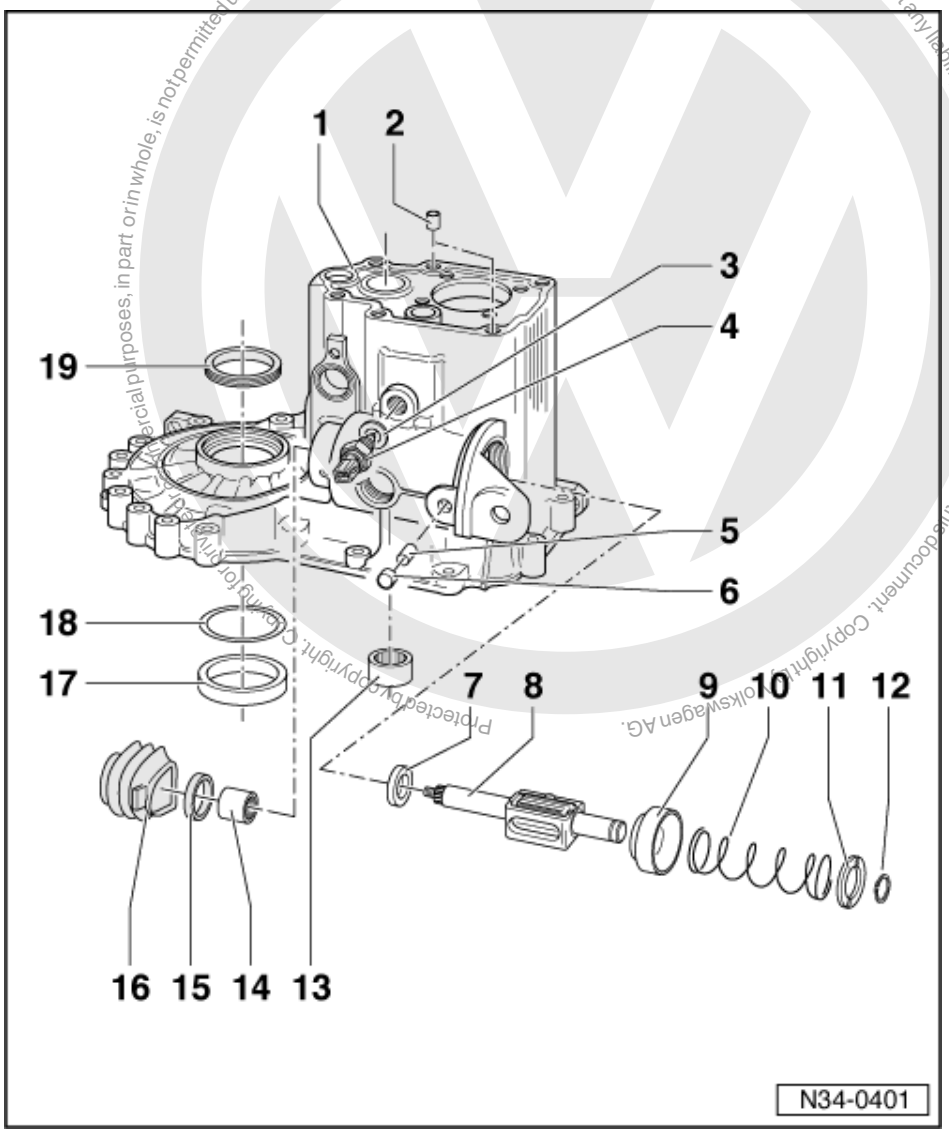

8 Selector shaft
- Selector shaft modified from 05.96 so that the reverse gear can be engaged without waiting
- Removing and installing
  => from page 107

9 Stop cap

10 Spring

11 Retaining plate
- Hold retaining plate tight when releasing securing ring (item 12). Then carefully relieve spring tension (item 10).

12 Securing ring
- Always renew

13 Needle roller bearing
- For output shaft
- Removing => Fig. 5
- Installing => Fig.6

satelettronica

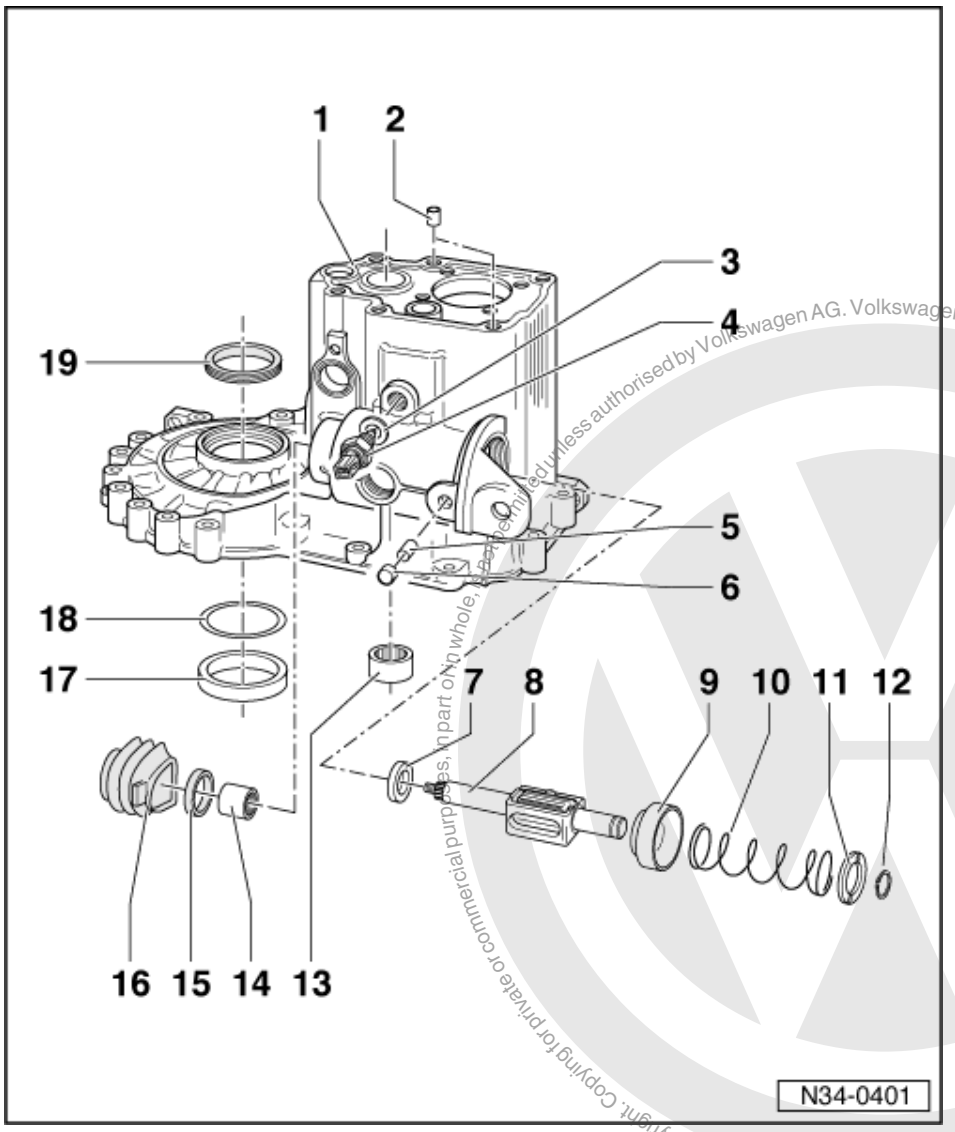

Protected by copyright. Copying for private or commercial purposes, in part or in whole, is not permitted unless authorised by Volkswagen AG. Volkswagen AG does not guarantee or accept any liability with respect to the correctness of information in this document. Copyright by Volkswagen AG.
satelettronica

14 Ball sleeve

- For selector shaft
- Pulling out => Fig. 3
- Pressing in => Fig. 4

15 Oil seal

- For selector shaft
- Can be renewed with gearbox installed
- Removing => Fig. 1
- Pulling in => Fig. 2

16 Protective sleeve

- For selector shaft

17 Outer race/taper roller bearing

- For differential
- Driving in and out
  => from page 177
- If replaced: Adjust differential
  => Page 190

18 Shim S1

- Adjustment overview
  => Page 193

19 Drive flange seal

- Renewing => Page 174

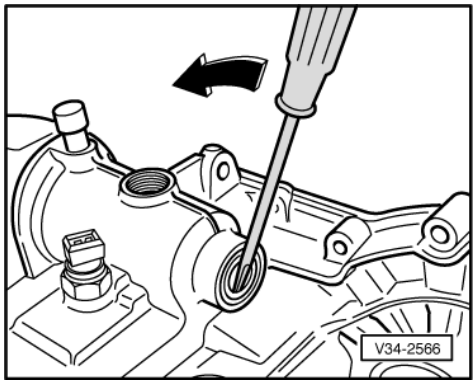

-> Fig.1 Removing selector shaft seal -A-

- Lever out in direction of arrow with a screwdriver.

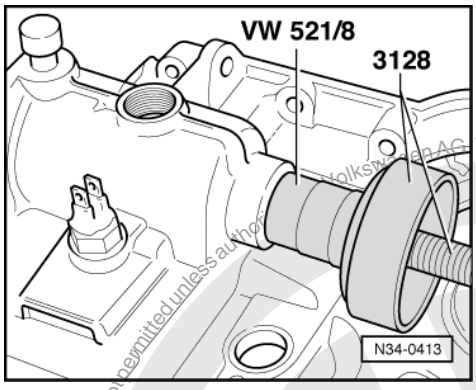

-> Fig.2 Pulling in selector shaft seal

- Pull in onto stop.
- Drive in with VW 521/8 when gearbox is removed.

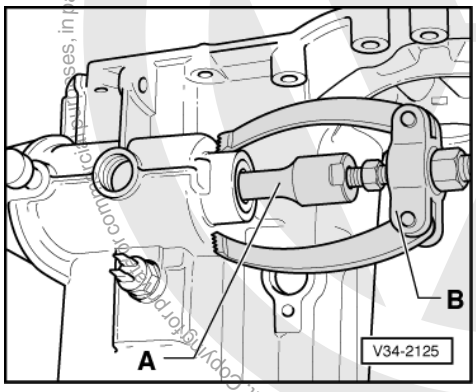

-> Fig.3 Removing selector shaft ball sleeve

A - Internal extractor 18 ... 23 mm, e.g. Kukko 21/3

B - Counter support. e.g. Kukko 22/1

Protected by copyright. Copyright by Volkswagen AG.
Volkswagen AG does not guarantee or accept any liability with respect to the correctness of information in this document.
satelettronica

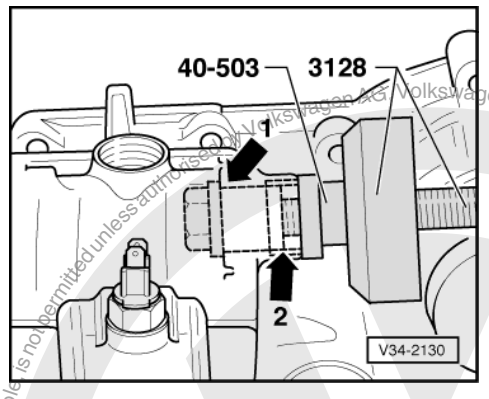

-> Fig.4 Pulling in selector shaft ball sleeve

- Pull in onto stop (arrow 1).

Installation position:

The ball sleeve projects out of the hole at the seal end (arrow 2).

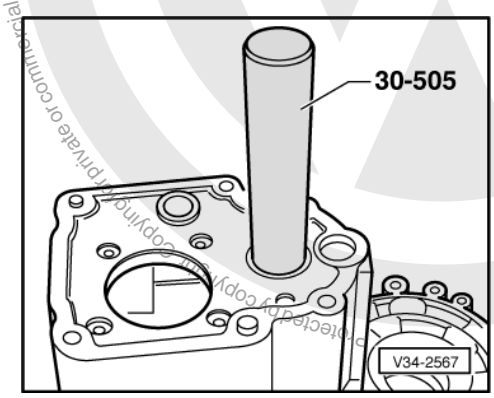

-> Fig.5 Driving-out needle bearing.

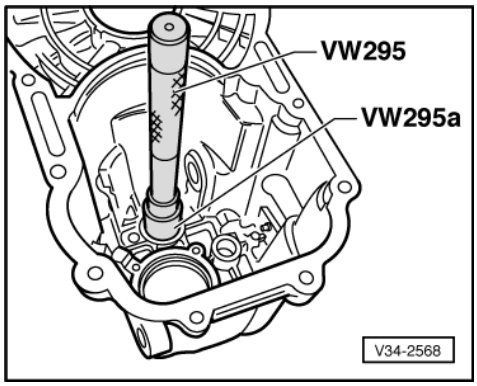

Volkswagen AG does not guarantee or accept any liability with respect to the correctness of information in this document. Copyright by Volkswagen AG. Protected by copyright. Copying for private or commercial purposes, in part or in whole, is not permitted unless authorised by Volkswagen AG.
satelettronica

-> Fig.6 Knocking needle roller bearing in onto stop

6 - Checking gearbox oil

6.1 - Checking gearbox oil

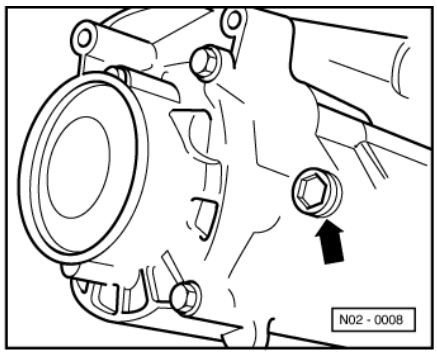

Gear oil specification => Page 2

- Turn steering to left onto stop.
- -> To check gearbox oil remove oil plug (arrow).

The oil level is correct when the gearbox is full to the lower edge of the filler hole.

- Fit plug (arrow).

When filling with new oil note following:

- Remove plug (arrow).
- Top up oil to lower edge of filler hole.
- Fit plug (arrow).

Tightening torque

Oil filler plug	25 Nm

Protected by copyright. Copying for private or commercial purposes, in part or in whole, is not permitted unless authorised by Volkswagen AG. Volkswagen AG does not guarantee or accept any liability with respect to the correctness of information in this document. Copyright by Volkswagen AG.
satelettronica

7 - Servicing clutch housing

7.1 - Servicing clutch housing

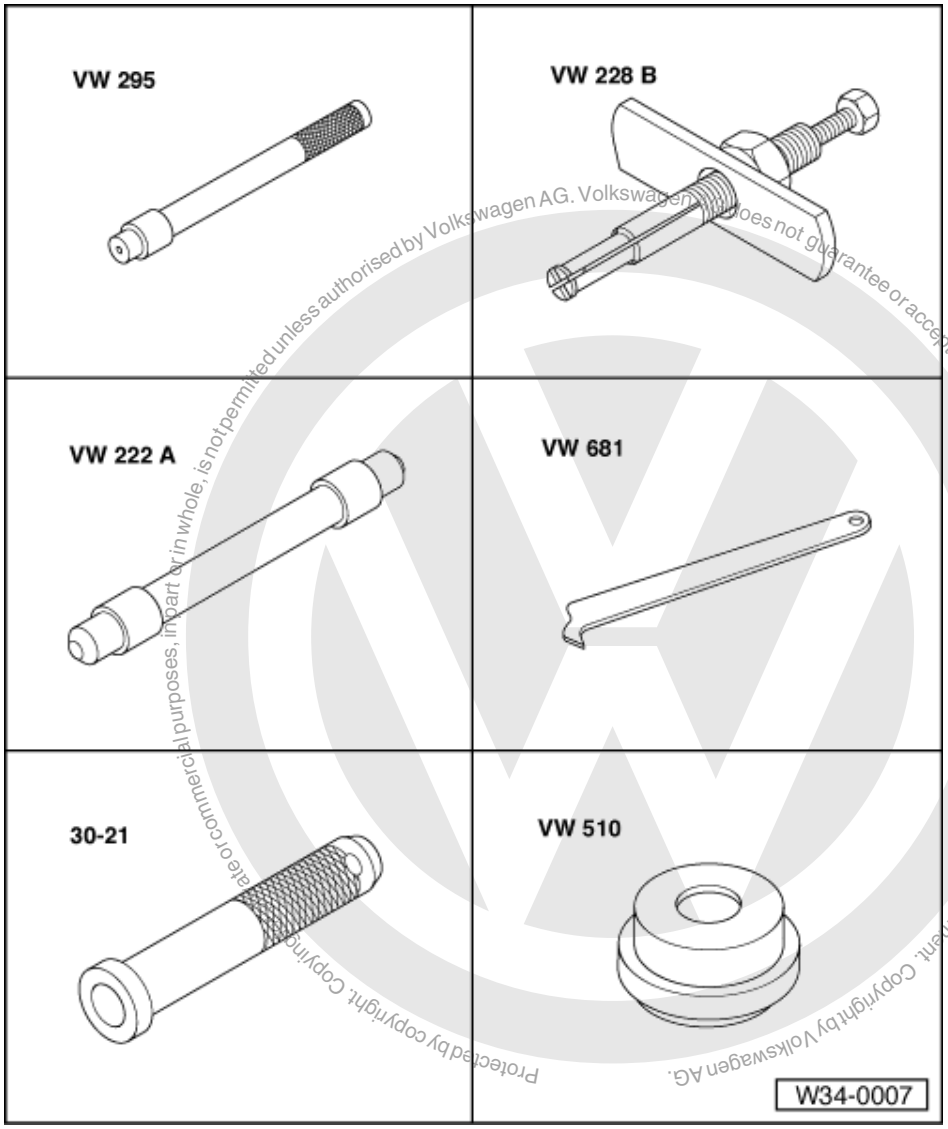

Protected by copyright. Copying for private or commercial purposes, in part or in whole, is not permitted unless authorised by Volkswagen AG. Volkswagen AG does not guarantee or accept any liability with respect to the correctness of information in this document. Copyright by Volkswagen AG.

satelettronica

Special tools and workshop equipment required

- VW 295 Drift
- VW 228 B Puller
- VW 222 A Drift
- VW 681 Extractor
- 30-21 Sleeve
- VW 510 Press piece

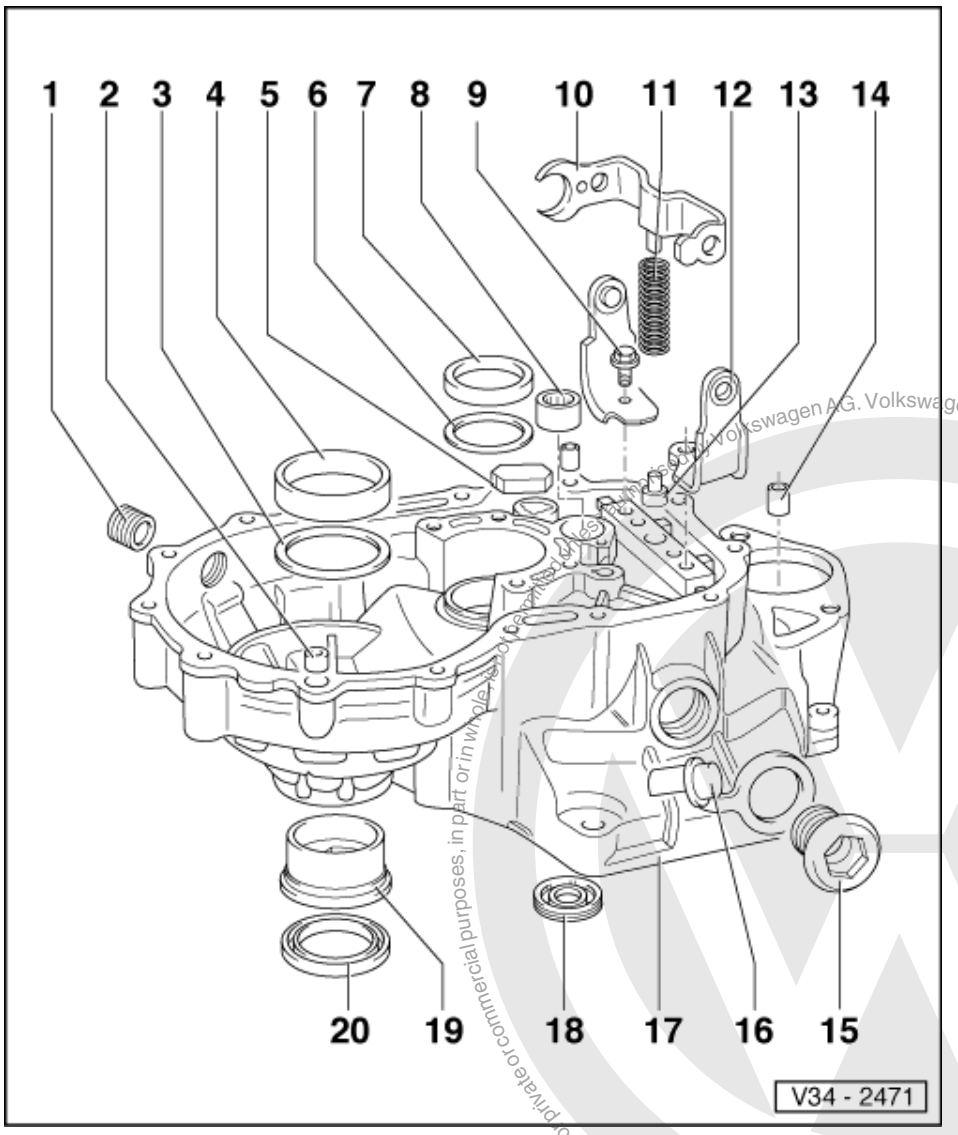

1 Oil drain plug, 25 Nm
- Without magnet

2 Dowel sleeve
- (Qty. 2)

3 Shim S2
- Always 1 mm thick

4 Outer race/taper roller bearing
- For differential
- Removing and installing
  => from Page 177
- If replaced: Adjust differential
  => Page 190

5 Magnet
- Held in place by housing joint surface
- Insert with sealant
  AMV 188 200 03

Protected by copyright. Copying for private or commercial purposes, in part or in whole, is not permitted unless authorised by Volkswagen AG. Volkswagen AG does not guarantee or accept any liability with respect to the correctness of information in this document. Copyright by Volkswagen AG.
satelettronica

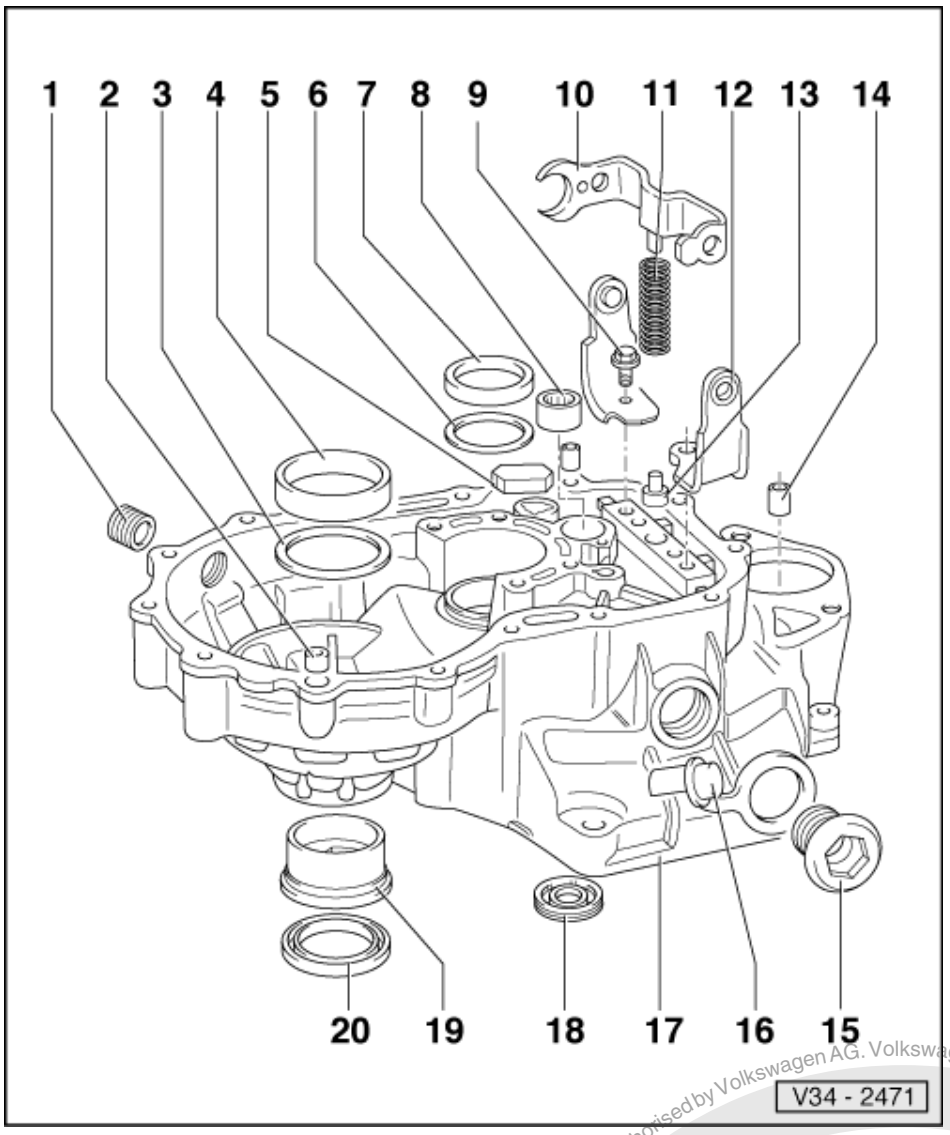

6 Shim
- For output shaft
- Adjustment overview
  => Page 193

7 Outer race/taper roller bearing
- For output shaft
- Driving in and out
  => from page 156
- If replaced: Adjust output shaft
  => Page 170

8 Needle roller bearing
- For input shaft
- Pulling out => Fig. 1
- Driving in => Fig. 2

9 Hexagon bolt, 25 Nm
- With locking flutes below bolt head

10 Reverse lever

11 Spring

Protected by copyright. Copying for private or commercial purposes, in part or in whole, is not permitted unless authorised by Volkswagen AG. Volkswagen AG does not guarantee or accept any liability with respect to the correctness of information in this document. Copyright by Volkswagen AG.
satelettronica

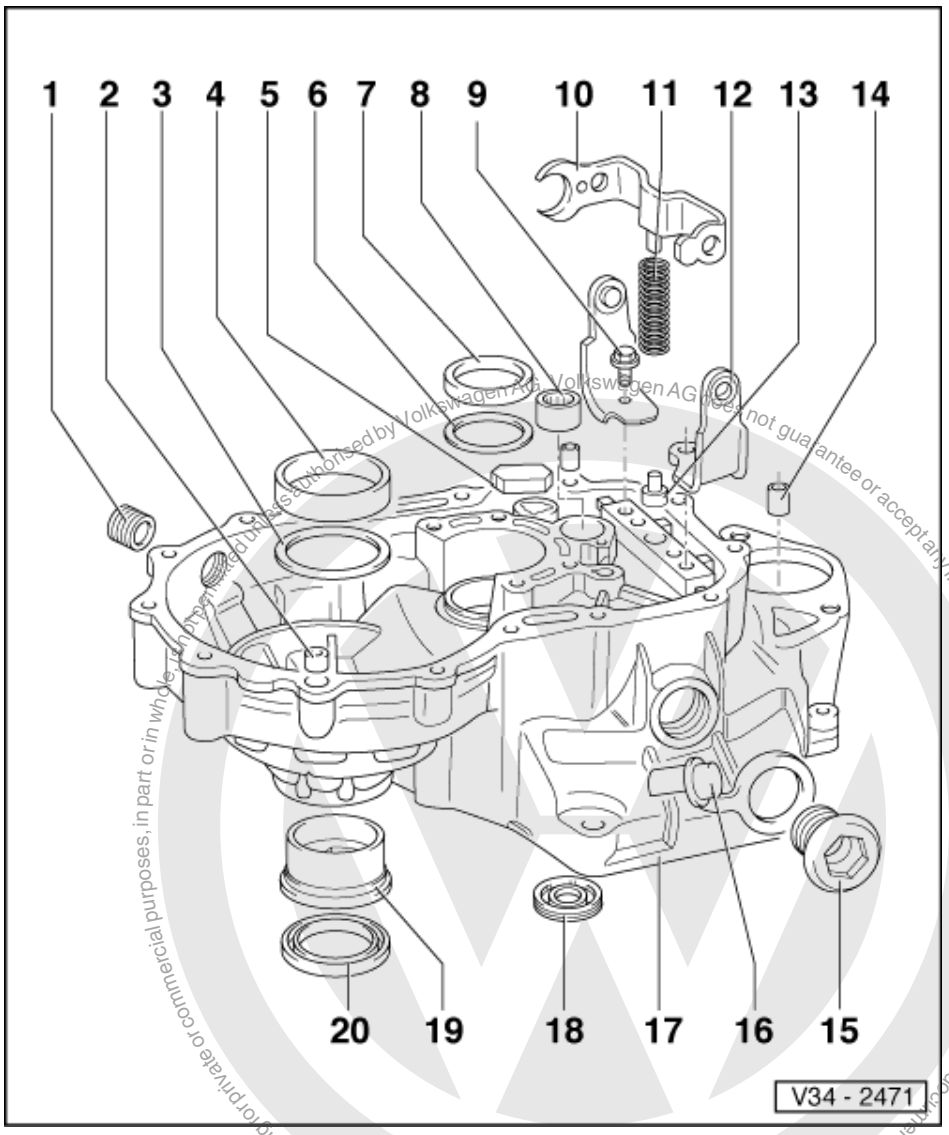

12 Reverse lever support
13 Sliding piece
14 Starter bush
- Pulling out => Fig. 3
- Driving in => Fig. 4
- Can be replaced without removing gearbox

15 Sealing plug
- Green - Clutch diameter 210 mm
- White - Clutch diameter 190 and 200 mm

Note:

It is important to allocate parts correctly e.g. when exchanging gearbox or rebuilding a clutch.

Protected by copyright. Copying for private or commercial purposes, in part or in whole, is not permitted unless authorised by Volkswagen AG. Volkswagen AG does not guarantee or accept any liability with respect to the correctness of information in this document. Copyright by Volkswagen AG.
satelettronica

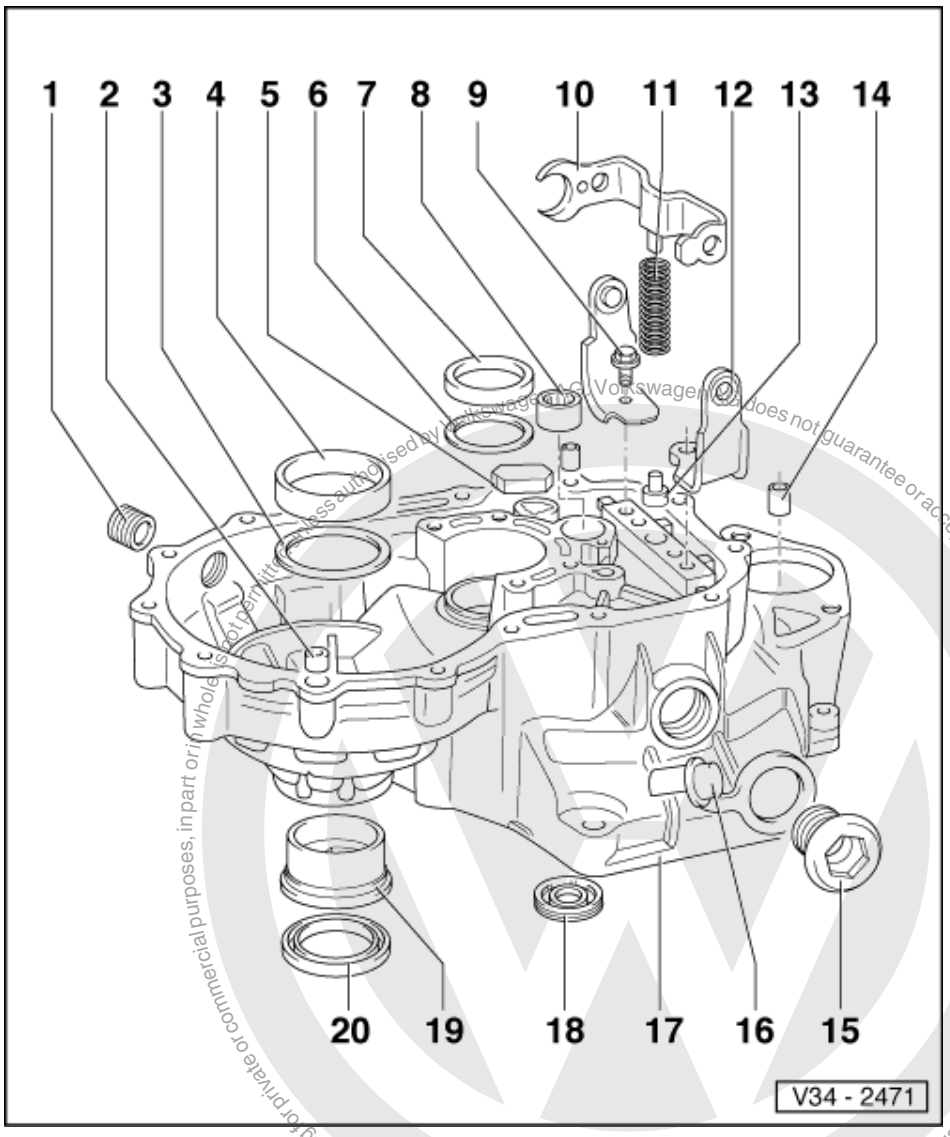

Consequences if incorrect sealing plug is installed:

1. White sealing plug -

   210 mm ø clutch

   - The TDC sensor is destroyed and the markings on the flywheel are damaged. Parts of TDC sensor lie in the clutch chamber.

2. Green sealing plug -

   190 and 200 mm ø clutch

   - Tester does not display a readout or readout is inaccurate or fluctuates.

16 Cap

Protected by copyright. Copying for private or commercial purposes, in part or in whole, is not permitted unless authorised by Volkswagen AG. Volkswagen AG does not guarantee or accept any liability with respect to the correctness of information in this document. Copyright by Volkswagen AG.
satelettronica

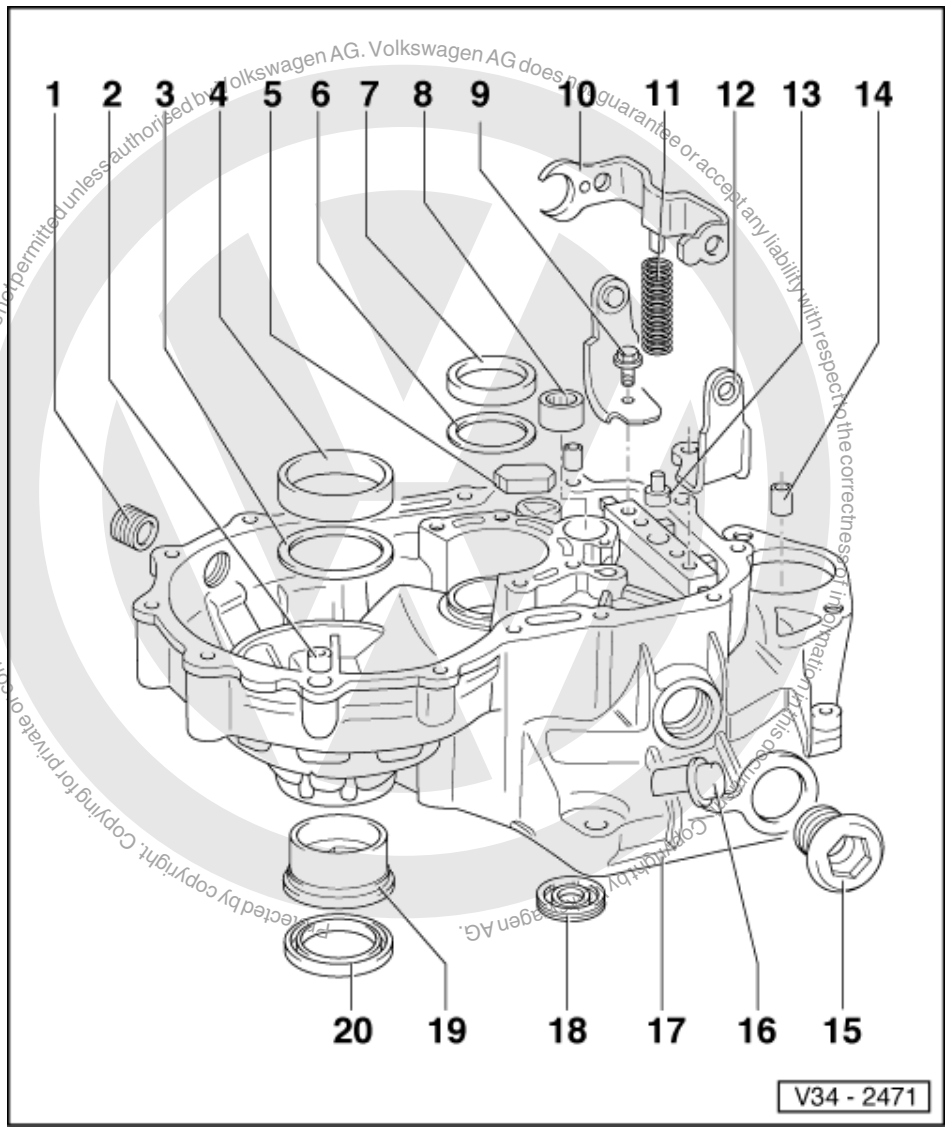

Volkswagen AG. Volkswagen AG does not guarantee or accept any liability with respect to the correctness of information in this document. Copyright by Volkswagen AG. Protected by copyright. Copying for private or commercial purposes, in part or in whole, is not permitted unless authorised by Volkswagen AG.

17 Clutch housing

- If replaced: =>Adjustment overview, Page 193
- Differences between 02K and 020 gearbox: There are holes for securing to all engines in the clutch housing of 02K gearbox.

18 Input shaft oil seal

- Pulling out => Fig. 5
- Driving in => Fig. 6

Note:

Clutch housing and seal matched to larger diameter of input shaft on vehicles with 2.0 ltr. engine.

19 Sleeve

- For oil seal (Item 20)
- Levering out => Fig. 7
- Driving in => Fig.8

20 Drive flange oil seal

- Renewing => Page 174

satelettronica

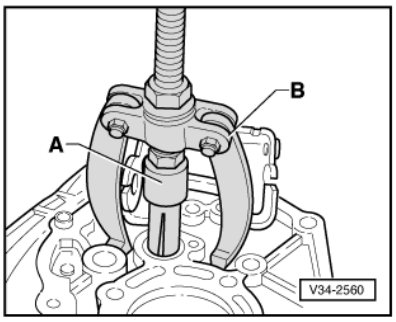

-> Fig.1 Pulling out input shaft needle bearing

A - Internal extractor, e.g. Kukko 21/3, 18.5 ... 23.5 mm

B - Counter support. e.g. Kukko 22/1

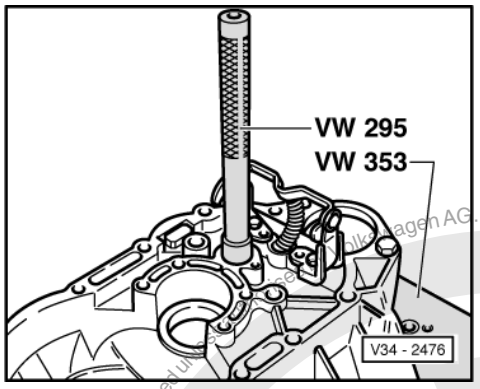

-> Fig.2 Driving in input shaft needle bearing

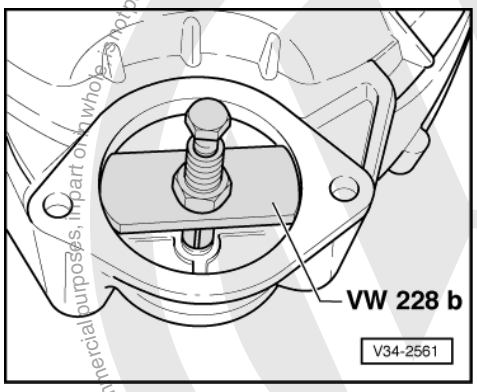

-> Fig.3 Pulling out starter bush.

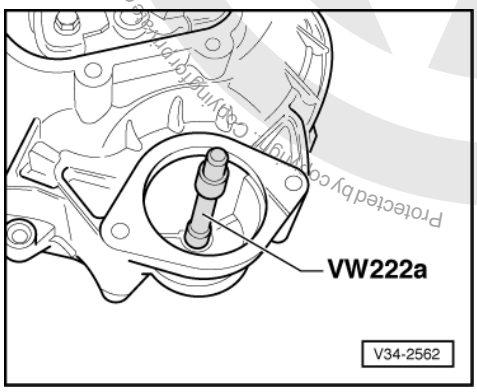

Volkswagen AG. Volkswagen AG does not guarantee or accept any liability with respect to the correctness of information in this document. Copyright by Volkswagen AG.
Protected by copyright. Copying for private or commercial purposes, in part or in whole, is not permitted unless authorised
satelettronica

Protected by copyright. Copying in part or in whole, is not permitted unless authorised by Volkswagen AG. Volkswagen AG does not guarantee or accept any liability with respect to the correctness of information in this document. Copyright by Volkswagen AG.

-> Fig.4 Driving in starter bush.

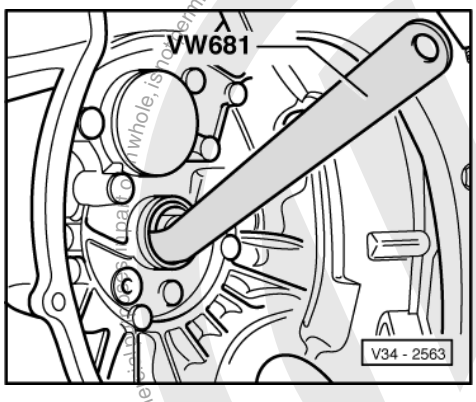

-> Fig.5 Pulling out output shaft oil seal.

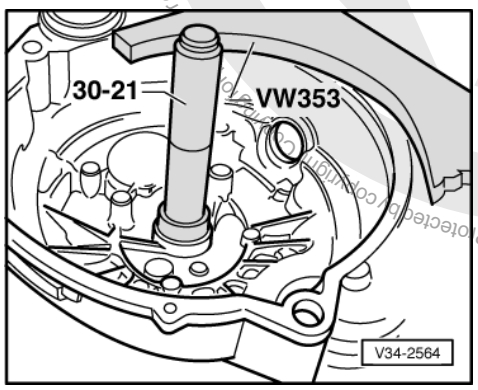

-> Fig.6 Driving in output shaft oil seal.

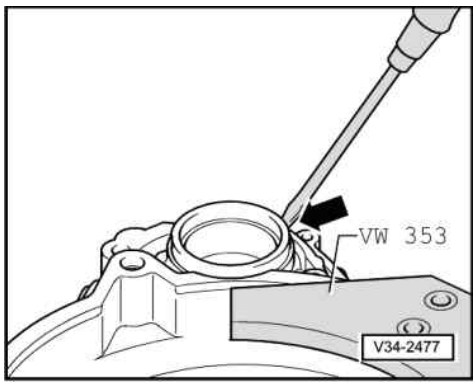

-> Fig.7 Lever out sleeve with a screwdriver (arrow)

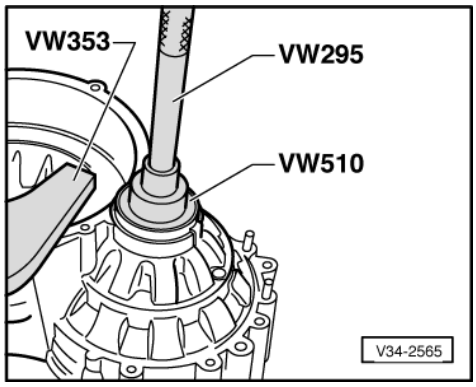

satelettronica

-> Fig.8 Driving in sleeve

Protected by copyright. Copying for private or commercial purposes, in part or in whole, is not permitted unless authorised by Volkswagen AG. Volkswagen AG does not guarantee or accept any liability with respect to the correctness of information in this document. Copyright by Volkswagen AG.

satelettronica

35 - Gears, Shafts

1 - Dismantling and assembling input shaft

1.1 - Dismantling and assembling input shaft

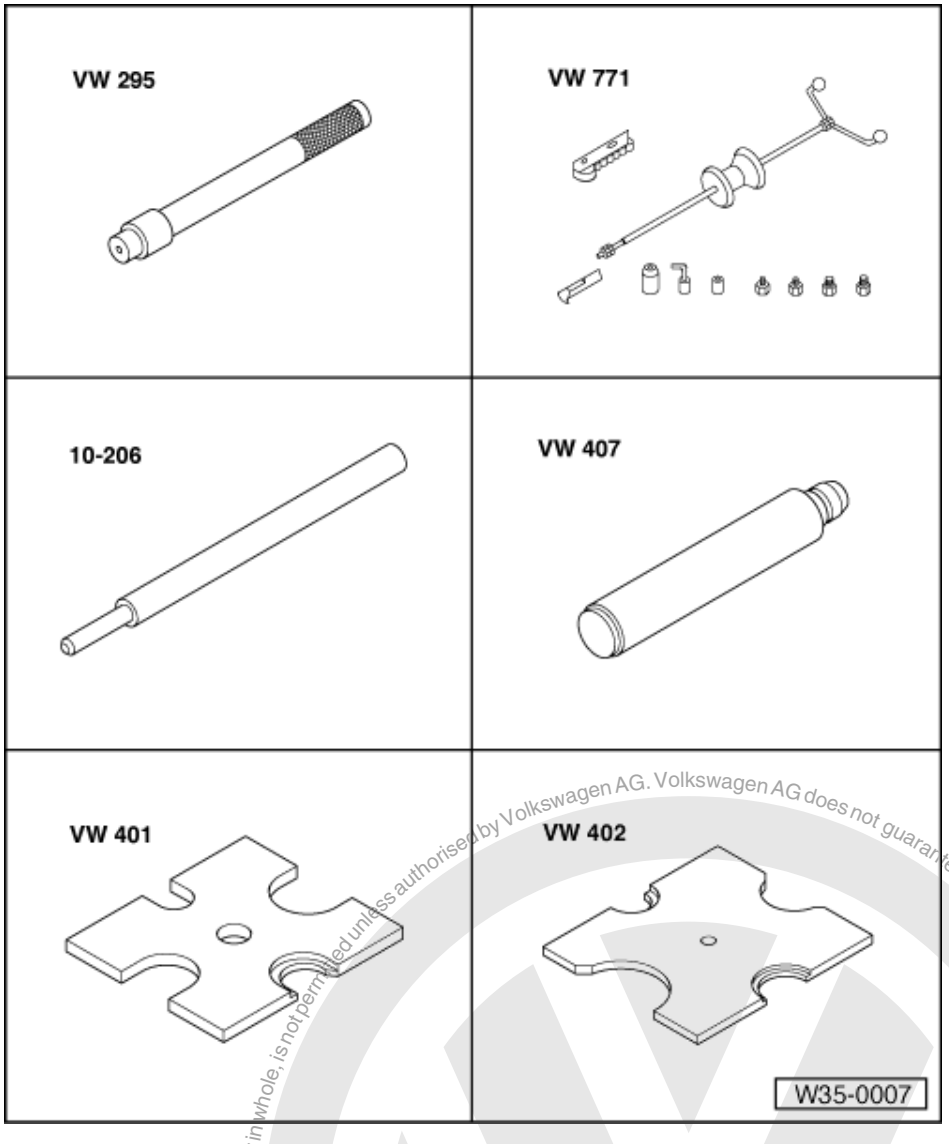

Special tools and workshop equipment required

- VW 295 Drift
- VW 771 Multi-purpose tool
- 10-206 Drift
- VW 407 Press tool
- VW 401 Press plate
- VW 402 Press plate

satelettronica
Protected by copyright. Copying for private or commercial purposes, in part or in whole, is not permitted unless authorised by Volkswagen AG. Volkswagen AG does not guarantee or accept any liability with respect to the correctness of information in this document. Copyright by Volkswagen AG.

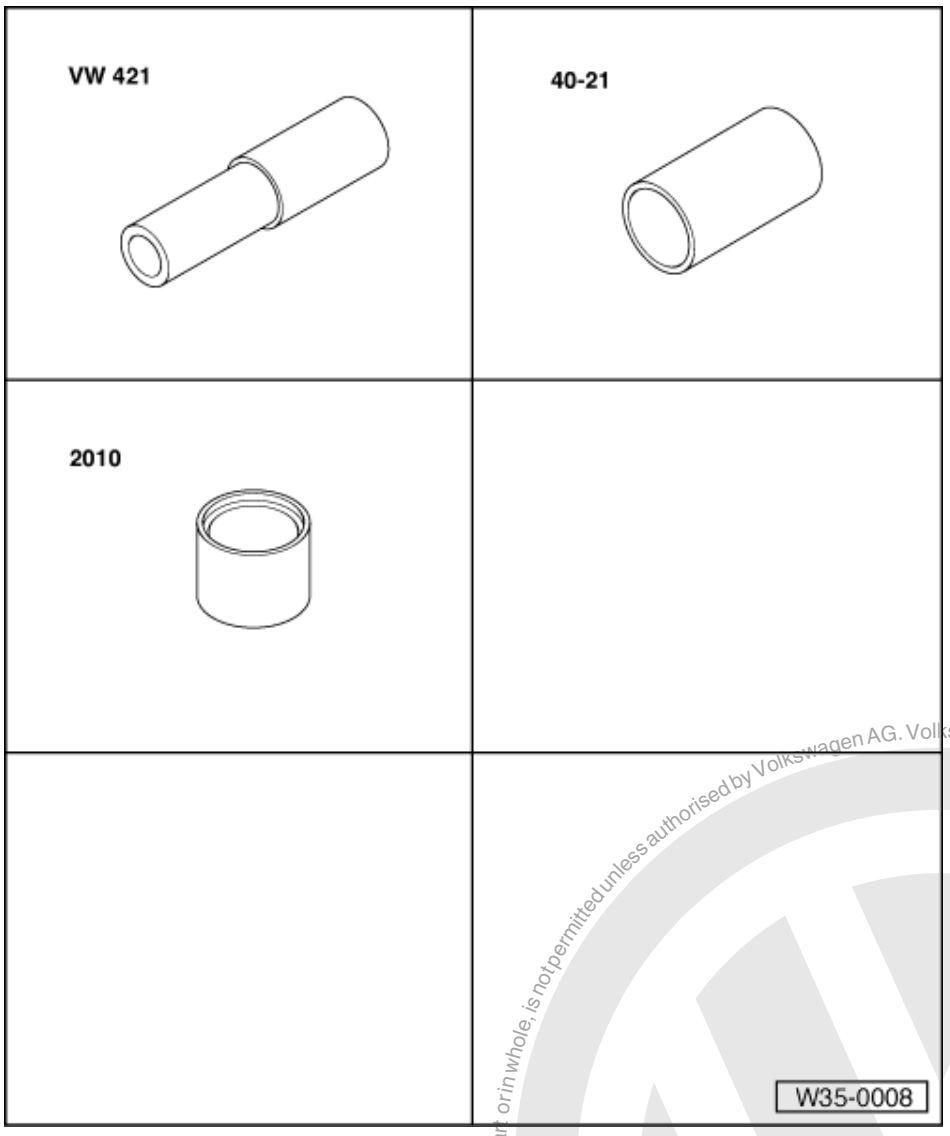

Special tools and workshop equipment required

- VW 421 Tube
- 40-21 Press tool
- 2010 Tube

Protected by copyright. Copying for private or commercial purposes, in part or in whole, is not permitted unless authorised by Volkswagen AG. Volkswagen AG does not guarantee or accept any liability with respect to the correctness of information in this document. Copyright by Volkswagen AG.
satelettronica

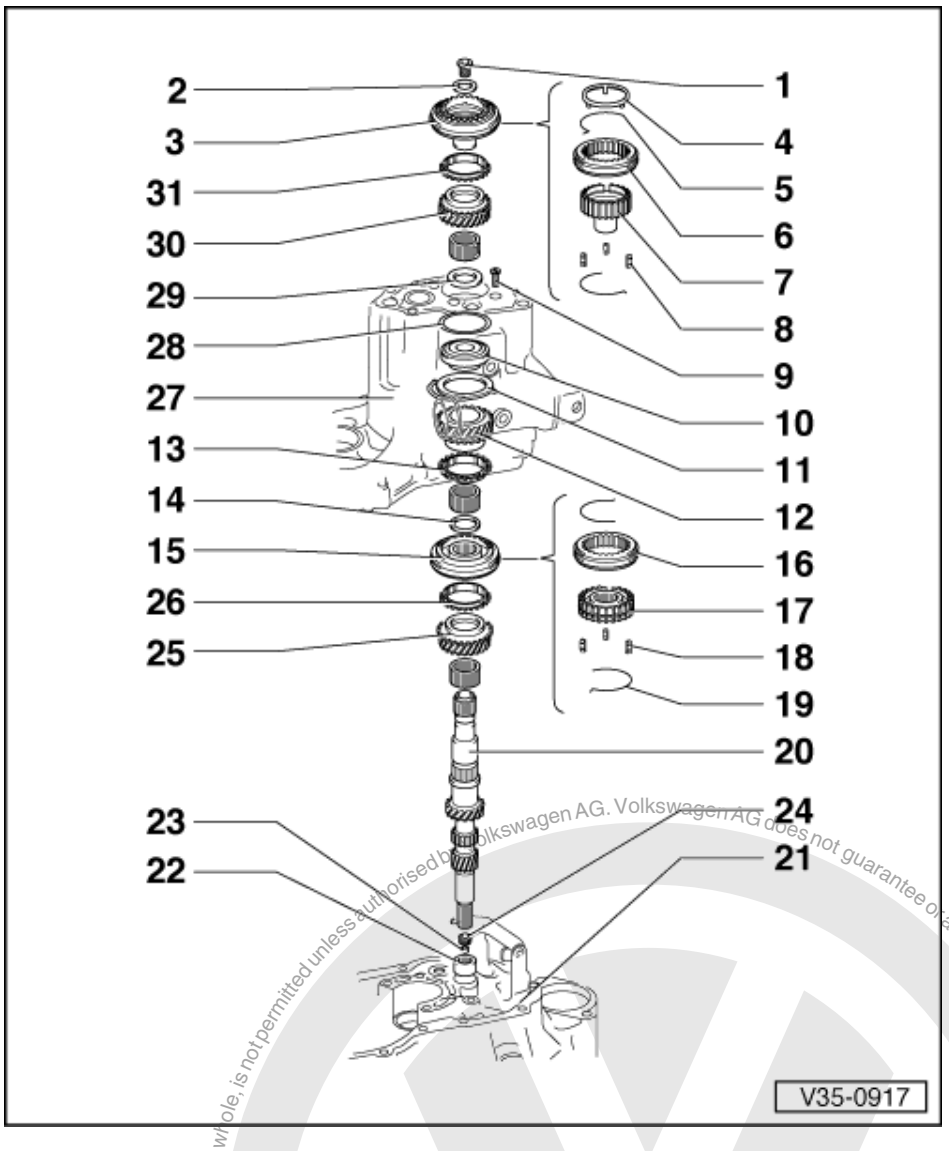

Notes:

- When installing new gear wheels, consult technical data
  =>Page 2 .
- Diameters enlarged in the following areas on vehicles with 2.0 ltr. engine:
  - Clutch plate splines
  - Input shaft oil seal
  - Front needle bearing

1 Bolt M17 x 1, 150 Nm
- Renew
- Removing and installing
  => from page 107

2 Dished washer

Protected by copyright. Copying for private or commercial purposes, in part or in whole, is not permitted unless authorised by Volkswagen AG. Volkswagen AG does not guarantee or accept any liability with respect to the correctness of information in this document. Copyright by Volkswagen AG.
satelettronica

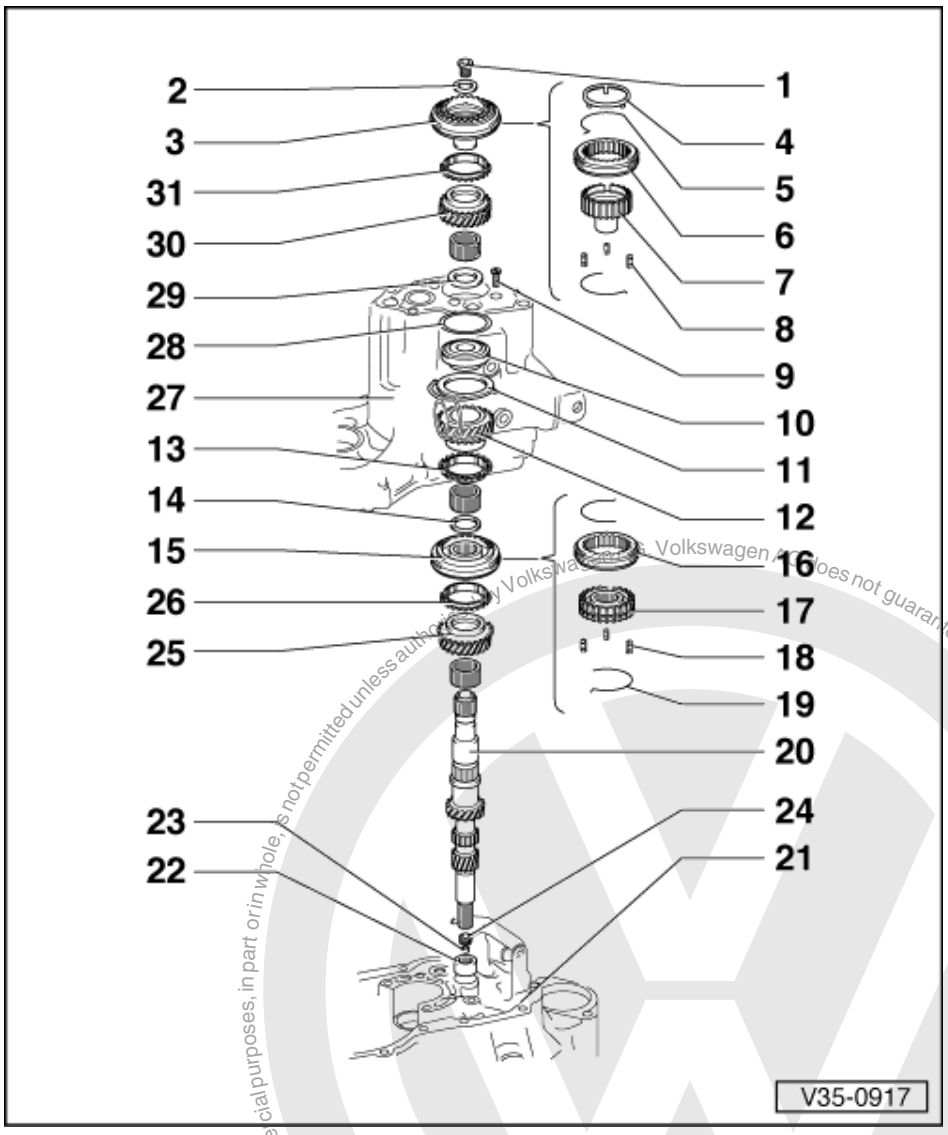

3 5th gear locking collar/synchro-hub
- Removing and installing
  => from page 107

4 Stop ring
- Prevents the locking pieces drifting out
- Removing =>Fig. 14
- Installing => Fig. 15

5 Spring

6 5th gear locking collar
- Installation position => Fig. 12

7 5th gear synchro-hub

8 Lock pieces (Qty. 3)

9 Oval-head countersunk screw
M7 x 23, 15 Nm
- Qty. 4

Protected by copyright. Copyright by Volkswagen AG.
Copyright by Volkswagen AG. does not guarantee or accept any liability with respect to the correctness of information in this document.
cial purposes, in part or in whole, is not permitted unless authorized by Volkswagen AG. Copying for private or
satelettronica

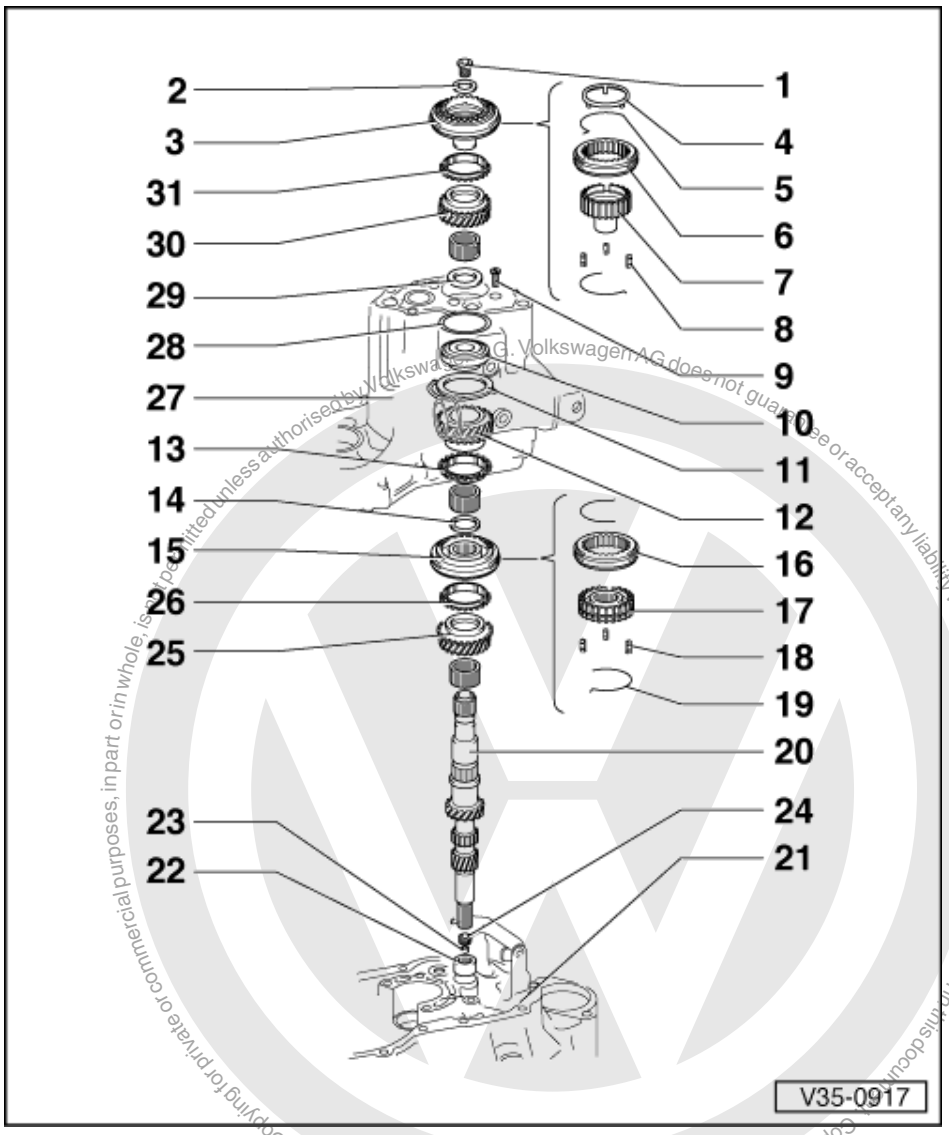

10 Grooved ball bearing
- Pressing off => Fig. 6
- Is pressed into gearbox housing when input shaft is installed => from page 107

11 Tensioning plate
- Locks grooved ball bearing in place

12 4th gear wheel

13 4th gear synchro-ring
- Checking for wear
  => Fig. 8

14 Circlip
- Renew

15 Locking collar with 3rd and 4th gear synchro-hub
- Press off with 3rd gear wheel => Fig. 7
- Synchro-hub installation position => Fig. 9
- Assembling => Fig. 10
- Pressing on => Fig. 11

satelettronica

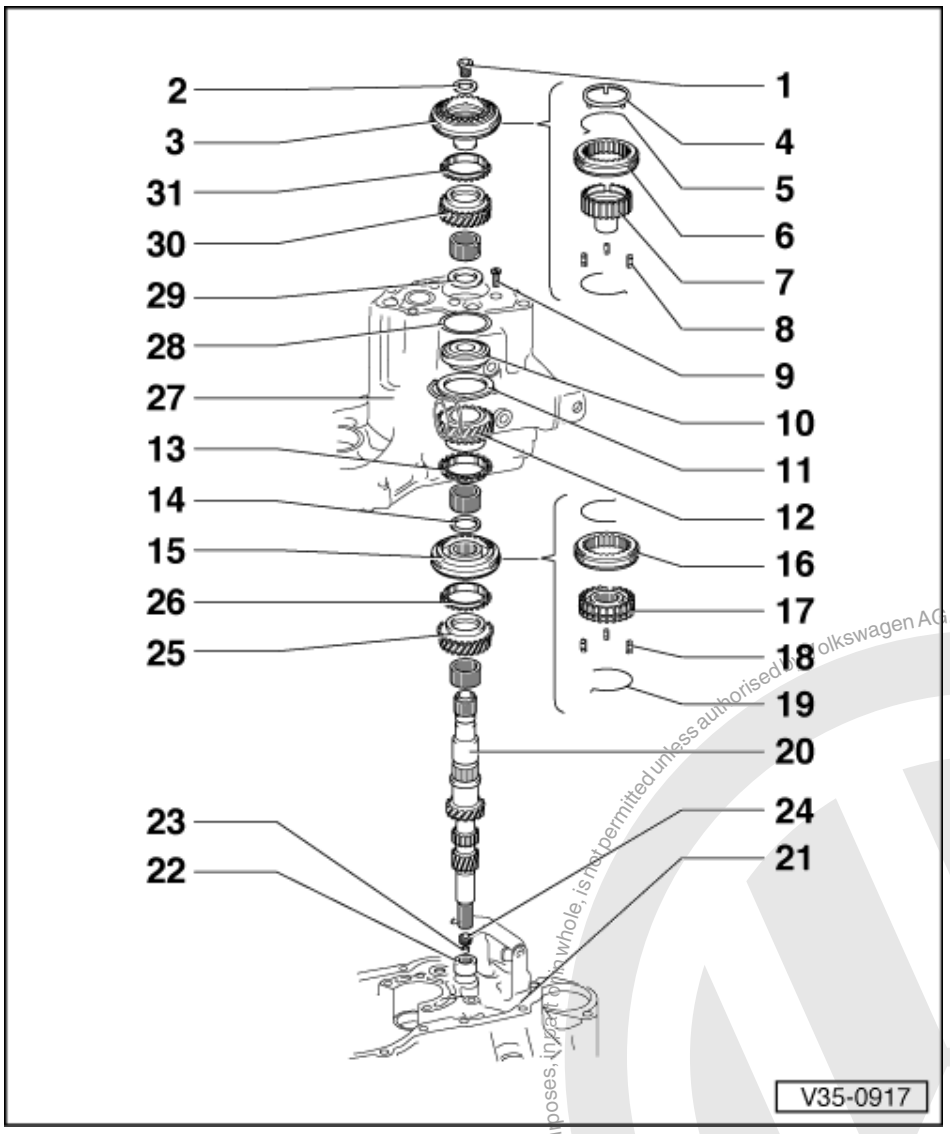

16 Locking collar
17 Synchro-hub
18 Lock pieces (Qty. 3)
19 Spring
20 Input shaft
- Diameter modified on vehicles with 2.0 ltr. engine => Page 143

21 Clutch housing
- Input shaft holes adapted on vehicles with 2.0 ltr. engine

22 Needle roller bearing
- For input shaft
- Removing and installing => Page 140

Protected by copyright. Copying for private or commercial purposes, in part or in whole, is not permitted unless authorised by Volkswagen AG. Volkswagen AG does not guarantee or accept any liability with respect to the correctness of information in this document. Copyright by Volkswagen AG.
satelettronica

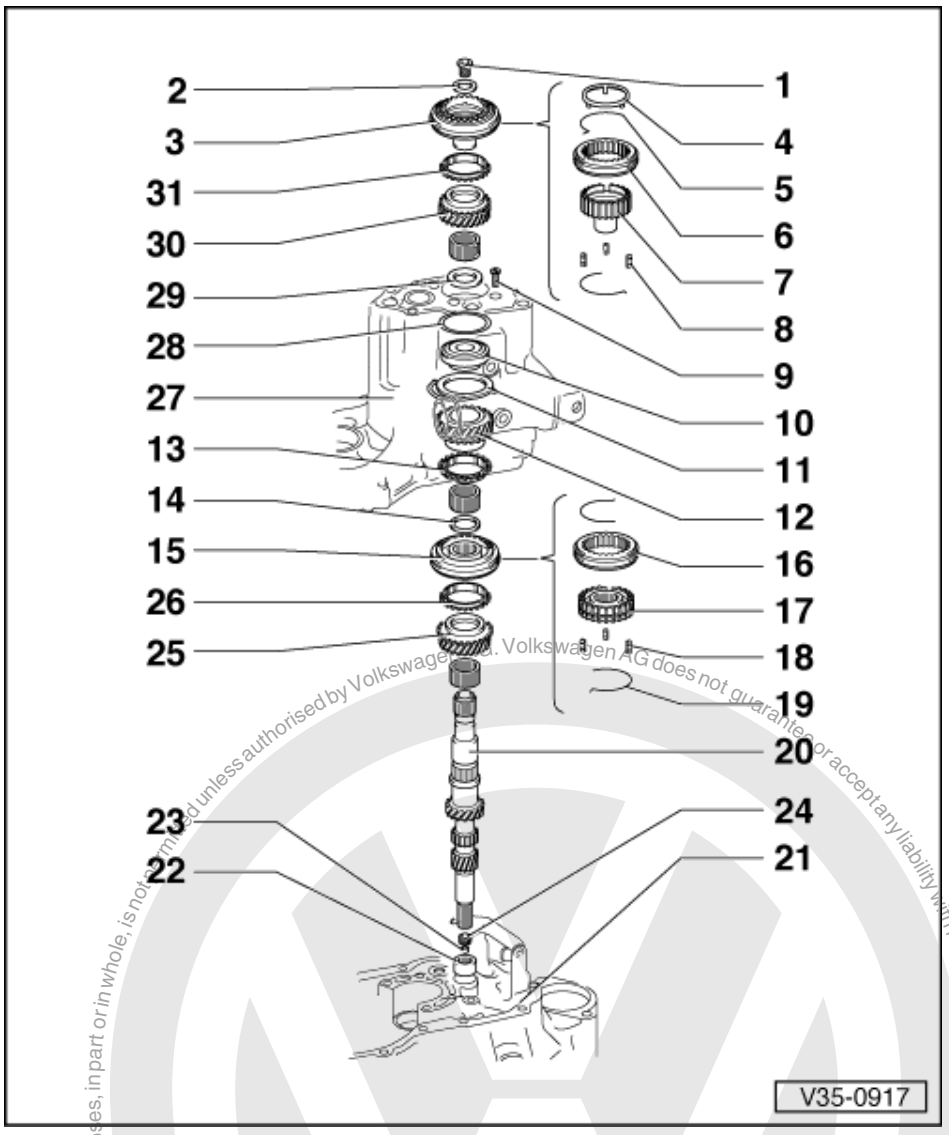

23 Sealing ring for clutch push rod

- Can be renewed with gearbox removed (not disassembled)
- Lever out with screwdriver => Fig. 1
- Installation position => Fig. 2
- Driving in => Fig. 3

24 Bearing bush for clutch push rod

- Installation position => Fig. 2
- Pulling out => Fig. 4
- Can be renewed with gearbox removed (not disassembled)
- Driving in => Fig. 5

25 3rd gear wheel

26 3rd gear synchro-ring

- Checking for wear
  => Fig. 8

27 Gearbox housing

Protected by copyright. Copyright by Volkswagen AG.
Copyright by Volkswagen AG. Volkswagen AG does not guarantee or accept any liability with respect to the correctness of information in this document.
Copying for private or commercial purposes, in part or in whole, is not permitted unless authorised by Volkswagen AG.
satelettronica

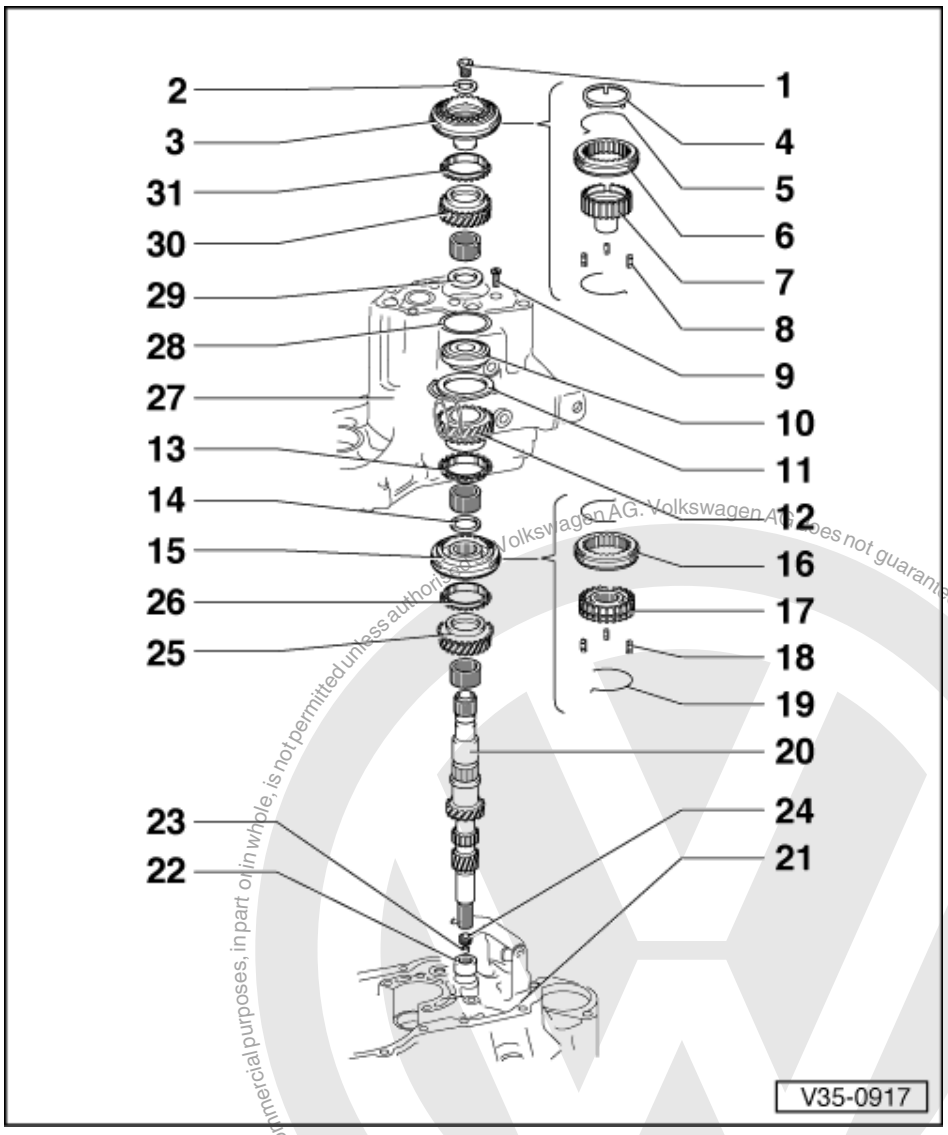

28 Shim
- For input shaft
- Note page 105

29 Thrust washer
- Installation position => Fig. 13
- Position 5th gear synchro-ring (item 31), then place 5th gear wheel (item 30) onto synchro-hub (item 7)

30 5th gear wheel

31 5th gear synchro-ring
- Check for wear
  => Fig. 8

Protected by copyright. Copyright by Volkswagen AG.
Volkswagen AG, Volkswagen AG does not guarantee or accept any liability with respect to the correctness of information in this document. Copying for private or commercial purposes, in part or in whole, is not permitted unless authorised by Volkswagen AG.
satelettronica

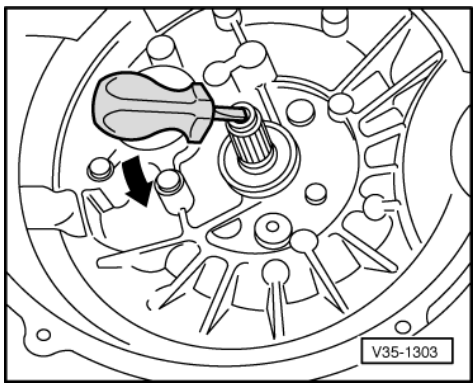

-> Fig.1 Levering out clutch push rod seal

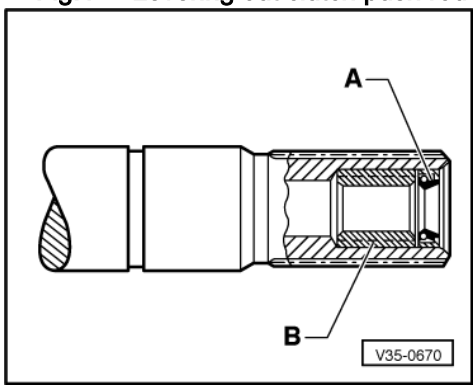

-> Fig.2 Installation position of seal and mounting bush

A - Clutch push rod seal

B - Clutch push rod mounting bush

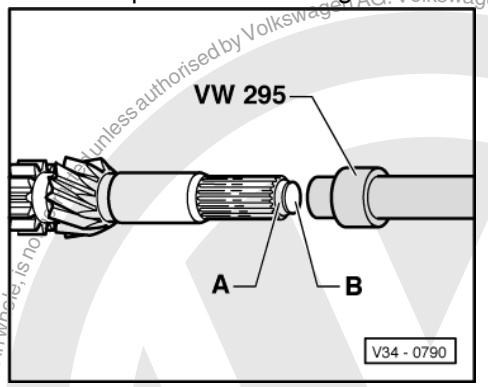

-> Fig.3 Driving in clutch push rod seal

- Drive in seal -A- flush with the assembly plugs -B- supplied. Take off assembly plugs. The seal now has a specified installation depth of 0.8 ... 1.3 mm. Apply a thin film of oil to sealing lip.

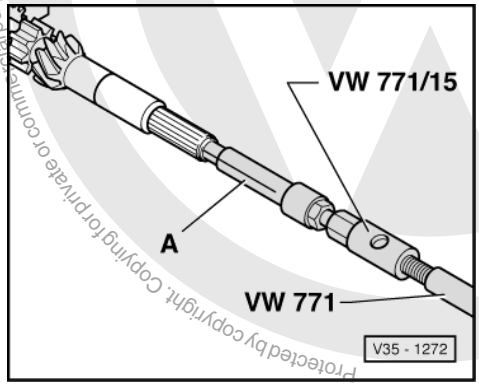

Protected by copyright. Copying for private or commercial purposes, in part or in whole, is not unless authorised by Volkswagen AG. Volkswagen AG does not guarantee or accept any liability with respect to the correctness of information in this document. Copyright by Volkswagen AG.

satelettronica

-> Fig.4 Pulling out clutch push rod mounting bush

A - Internal extractor, e.g. Kukko 21/01, 8 ... 12 mm

- Use threaded adapter from counter-support, e.g. Kukko 22/1 for connecting internal extractor and special tool VW 771/15.

Note:

With input shaft installed, pull out bearing bush using counter-support, e.g. Kukko 22/1 via thrust piece VW 512.

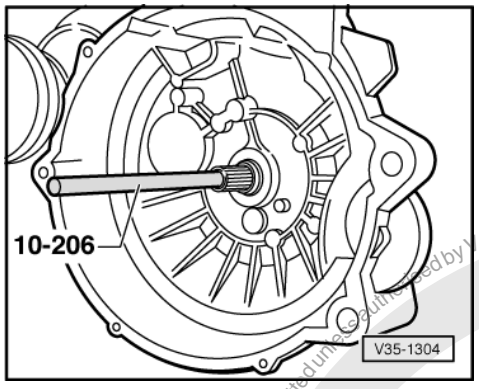

-> Fig.5 Driving in clutch push rod mounting bush as far as stop

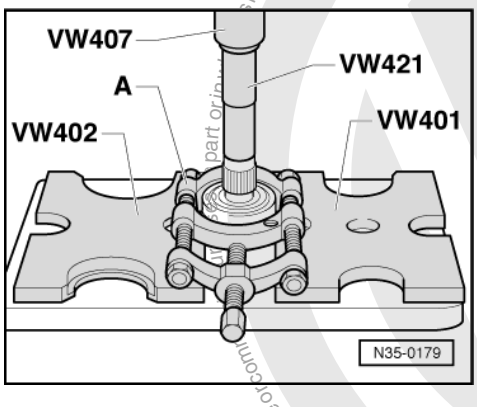

-> Fig.6 Pressing off grooved ball bearing

A - Separating tool 12...75 mm e.g. Kukko 17/1

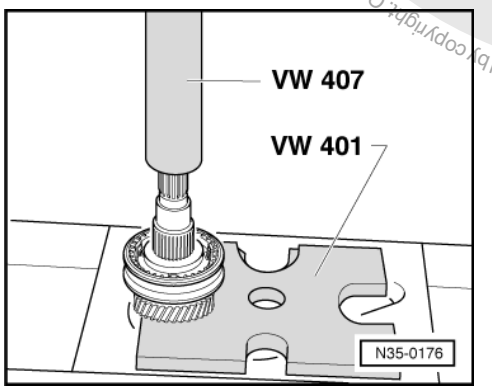

Protected by copyright. Copying for private or commercial purposes, in part or in whole, is not permitted unless authorised by Volkswagen AG. Volkswagen AG does not guarantee or accept any liability with respect to the correctness of information in this document. Copyright by Volkswagen AG.
satelettronica

-> Fig.7 Pressing off 3rd and 4th gear synchro hub and locking collar with 3rd gear sliding wheel

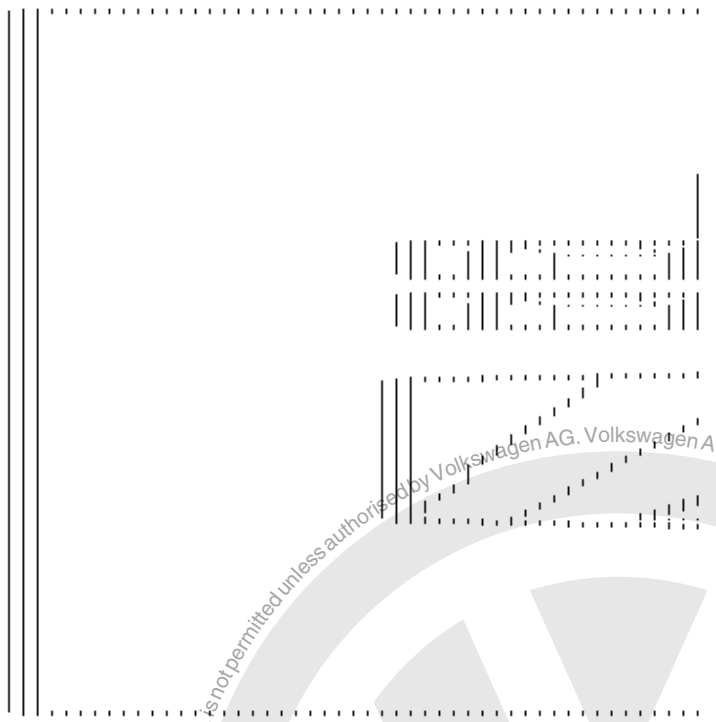

-> Fig.8 Checking synchro-ring for wear

- Press synchro-ring onto the gear wheel cone and measure gap "a" with feeler gauge.

Gap "a"	New dimension	Wear limit
3rd gear 4th gear 5th gear	1.15 ... 1.75 mm 1.3 ... 1.9 mm 1.3 ... 1.9 mm	0.5 mm

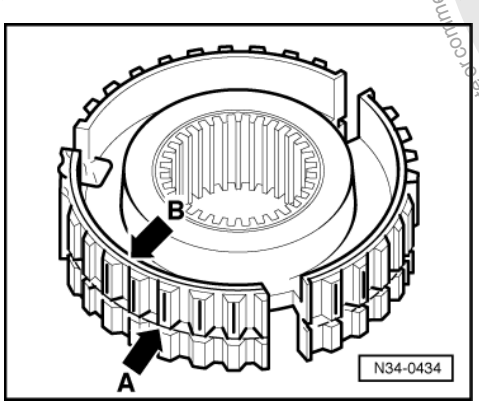

-> Fig.9 Installation position of 3rd and 4th gear synchro-hub

The shorter teeth below the deeper circumferential groove (arrow A) faces toward 3rd gear.

The groove on the top (arrow B) points towards 4th gear.

Protected by copyright. Copying for private or commercial purposes, in part or in whole, is not permitted unless authorised by Volkswagen AG. Volkswagen AG does not guarantee or accept any liability with respect to the correctness of information in this document. Copyright by Volkswagen AG.
satelettronica

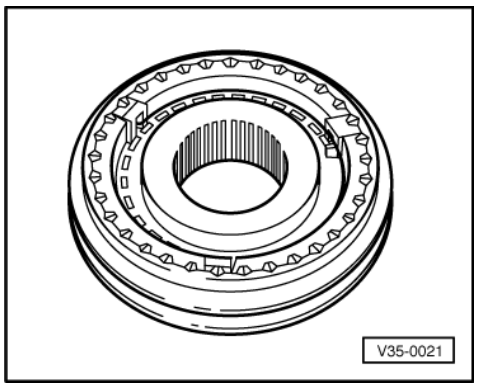

-> Fig.10 Assembling 3rd and 4th gear locking collar/synchro-hub

- Slide locking collar over synchro-hub.

The recesses for locking pieces in synchro-hub and locking collar must align.

- Insert locking pieces and install springs 120° off-set. The angled end of the spring must locate in the hollow locking piece.

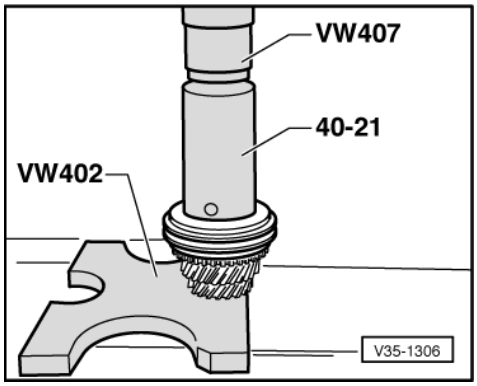

-> Fig.11 Pressing on 3rd and 4th gear synchro-hub with locking collar

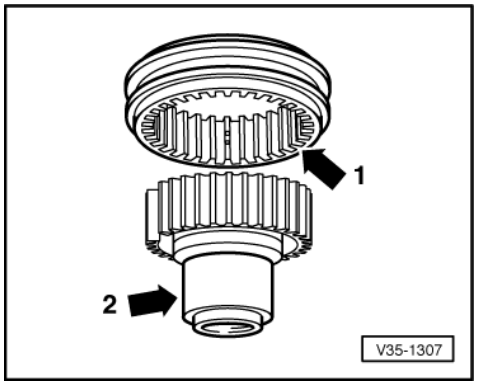

-> Fig.12 Installation position of 5th gear locking collar

- Slide locking collar over synchro-hub.

The recesses for locking pieces in synchro-hub and locking collar must align.

The chamfer on the spline (arrow 1) faces toward the 5th gear synchro-hub shaft (arrow 2).

Protected by copyright. Copying for private or commercial purposes, in part or in whole, is not permitted unless authorised by Volkswagen AG. Volkswagen AG does not guarantee or accept any liability with respect to the correctness of information in this document. Copyright by Volkswagen AG.
satelletronica

- Insert locking pieces and install springs 120° off-set. The angled end of the spring must locate in the hollow locking piece.

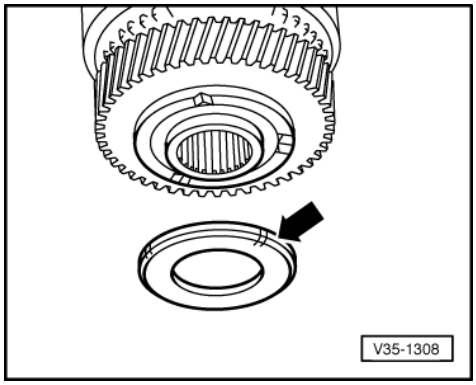

-> Fig.13 Installation position of thrust washer for 5th gear wheel

The chamfer (arrow) is located opposite the sliding gear wheel.

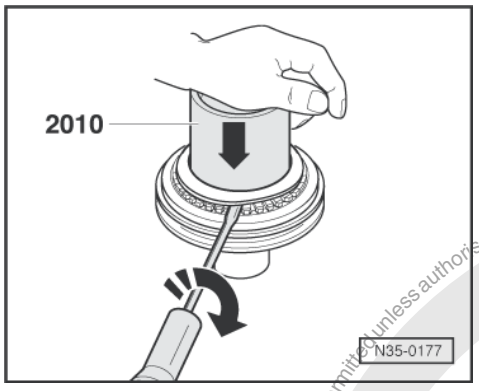

-> Fig.14 Removing thrust ring

- Press tube 2010 into the synchro-hub/thrust ring. Lever thrust ring out of synchro-hub from alternate sides.
- The thrust ring must be positioned fully on the tube section 2010 => Fig. 15
- Take off thrust ring together with tube section 2010.

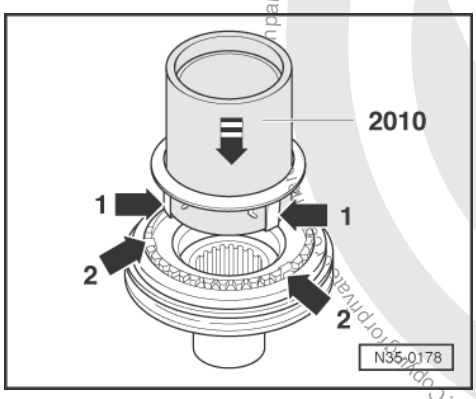

-> Fig.15 Installing thrust ring

- Insert thrust ring together with tube section 2010 into 5th gear synchro-hub/locking collar. The shoulders (arrow 1) lock in the recess (arrow 2) for the synchro-hub locking pieces.
- Take off tube 2010, the shoulders must lock in position in the synchro-hub when this is done.

Protected by copyright. Copyright by Volkswagen AG.
Copy or part copy is not permitted unless authorised by Volkswagen AG. Volkswagen AG does not guarantee or accept any liability with respect to the correctness of information in this document.
satelettronica

2 - Dismantling and assembling output shaft

2.1 - Dismantling and assembling output shaft

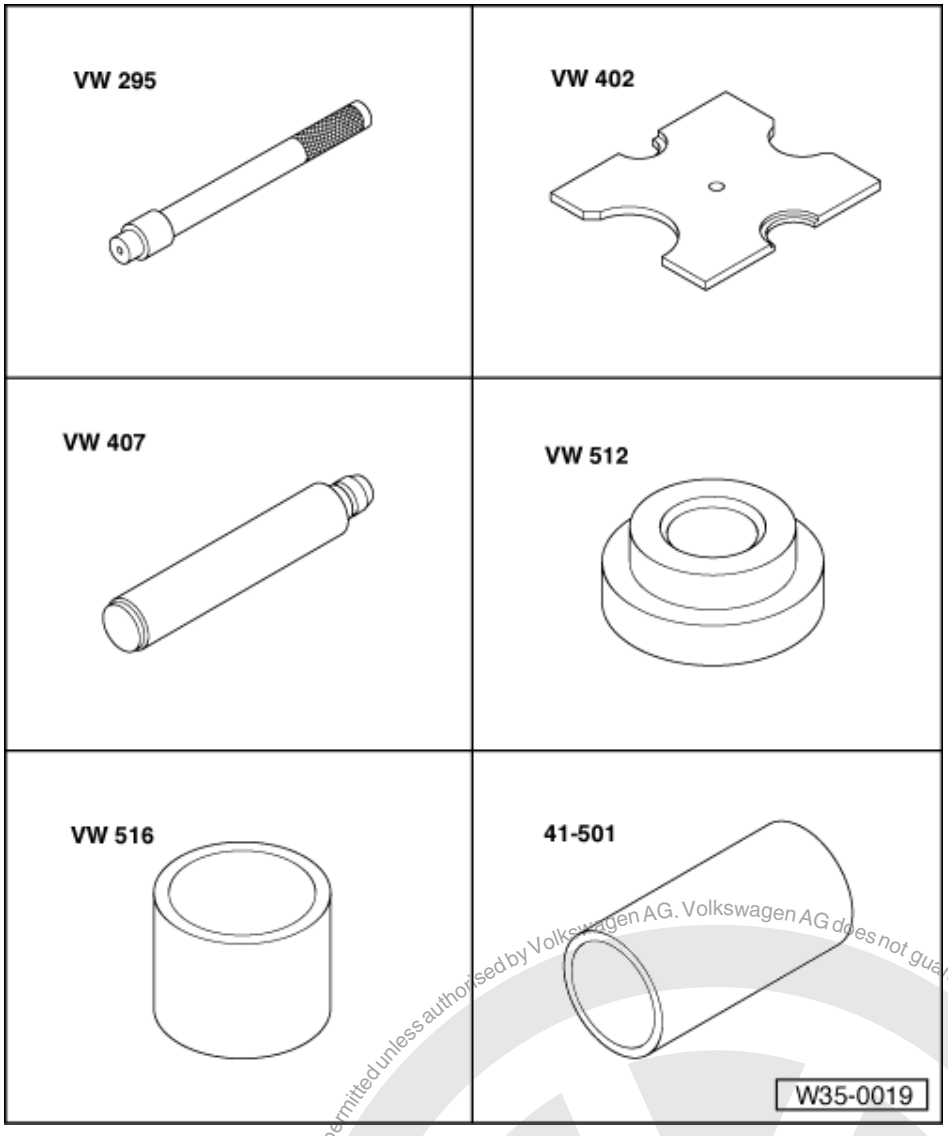

Special tools and workshop equipment required

- VW 295 Drift
- VW 402 Press plate
- VW 407 Press tool
- VW 512 Press disk
- VW 516 Tube
- 41-501 Drift sleeve

Protected by copyright. Copying for private or commercial purposes, in part or in whole, is not permitted unless authorised by Volkswagen AG. Volkswagen AG does not guarantee or accept any liability with respect to the correctness of information in this document. Copyright by Volkswagen AG.
satelettronica

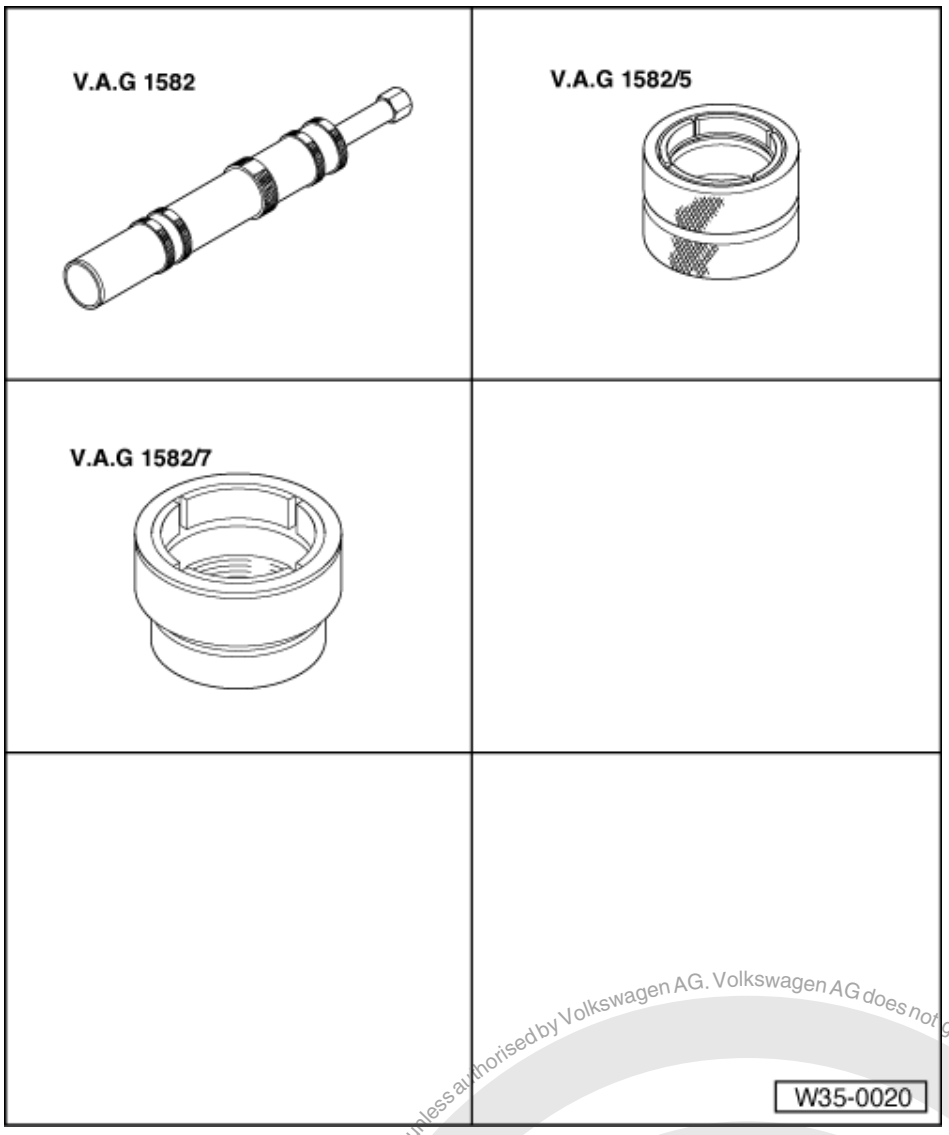

Special tools and workshop equipment required

- V.A.G 1582 Puller
- V.A.G 1582/5 Grip piece
- V.A.G 1582/7 Grip piece

satelettronica
Protected by copyright. Copying for private or commercial purposes, in part or in whole, is not permitted unless authorised by Volkswagen AG. Volkswagen AG does not guarantee or accept any liability with respect to the correctness of information in this document. Copyright by Volkswagen AG.

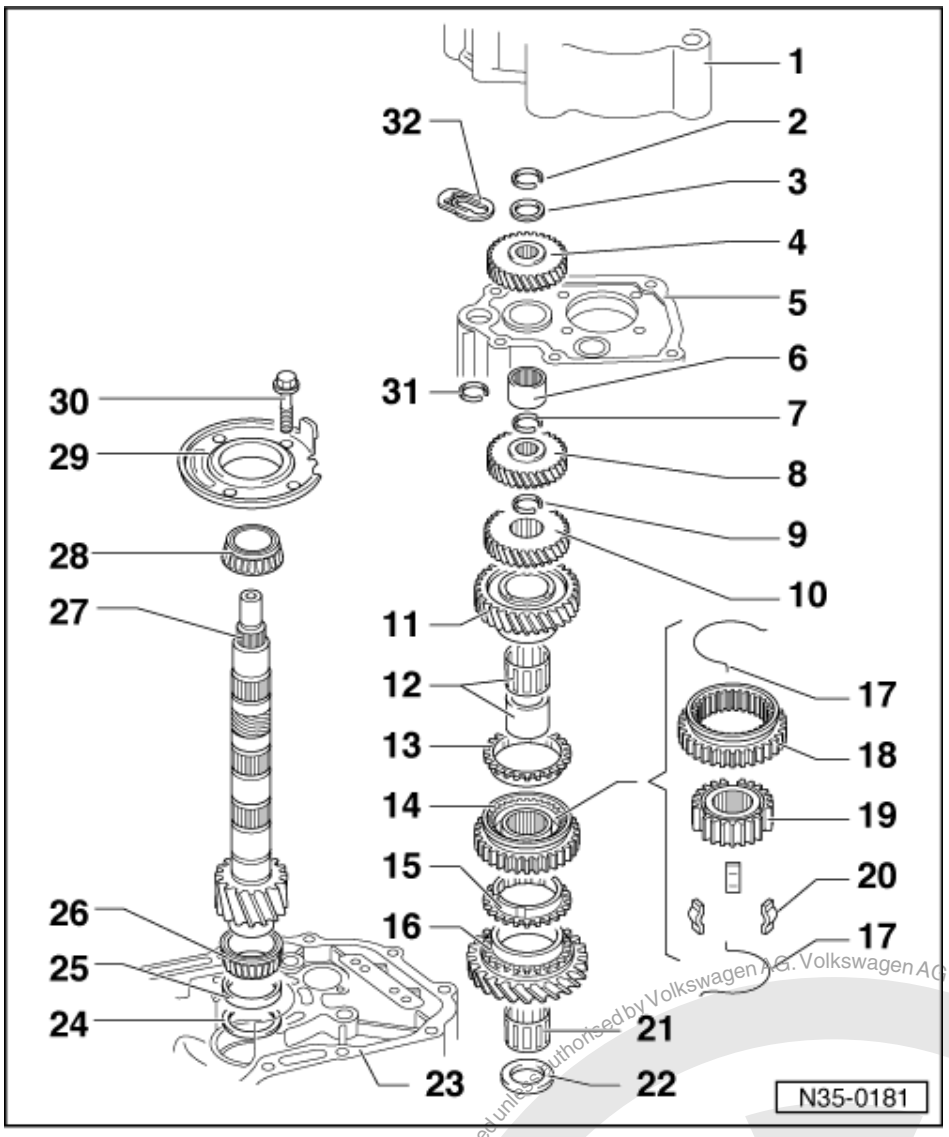

Notes:

- When installing new gear wheels or a new output shaft consult technical data =>Page 2 .
- If the output shaft or taper roller bearings have been renewed then carry out adjustment of the output shaft => Page 170 .
- Modified in the following areas on vehicles with 2.0 ltr. engine:
  Enlarged diameter for 4th gear wheel splines => item 8 , additional groove for circlip => item 31 of 3rd gear
- Allocating/output shafts => Page 169

1 Gearbox housing cover

satelettronica
Protected by copyright. Copying for private or commercial purposes, in part or in whole is not permitted unless authorised by Volkswagen AG. Volkswagen AG does not guarantee or accept any liability with respect to the correctness of information in this document. Copyright by Volkswagen AG.

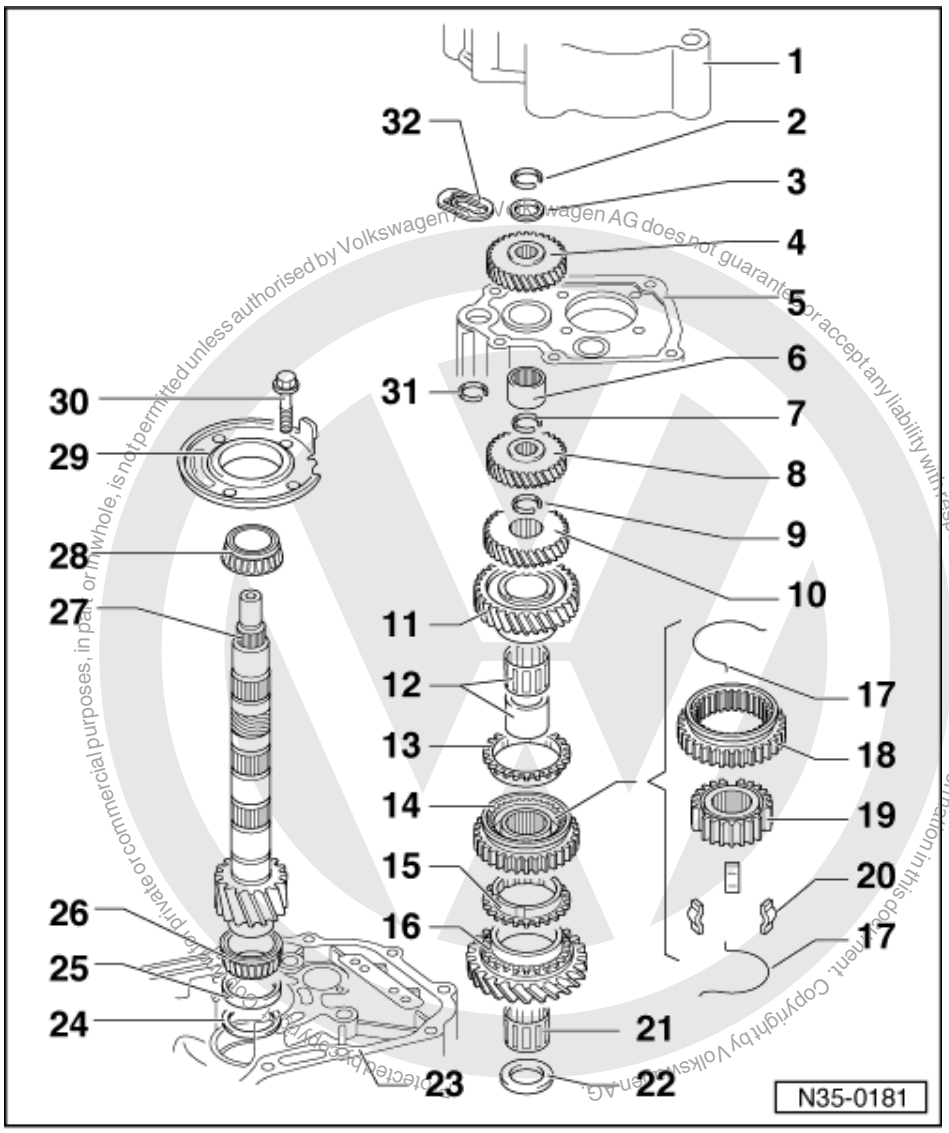

2 5th gear wheel securing ring
- Renew
- Vehicles with 2.0 ltr. engine: Modified method for securing 5th gear wheel => item 32

3 Thrust washer
- Deleted on vehicles with 2.0 ltr. engine

4 5th gear wheel
- Installing => from page 107
- Securing on vehicles with a 2.0 ltr. engine is with the securing plate (item 32) => Fig. 10

5 Gearbox housing

6 Needle bearing
- Removing and installing
  => Page 132

satelettronica

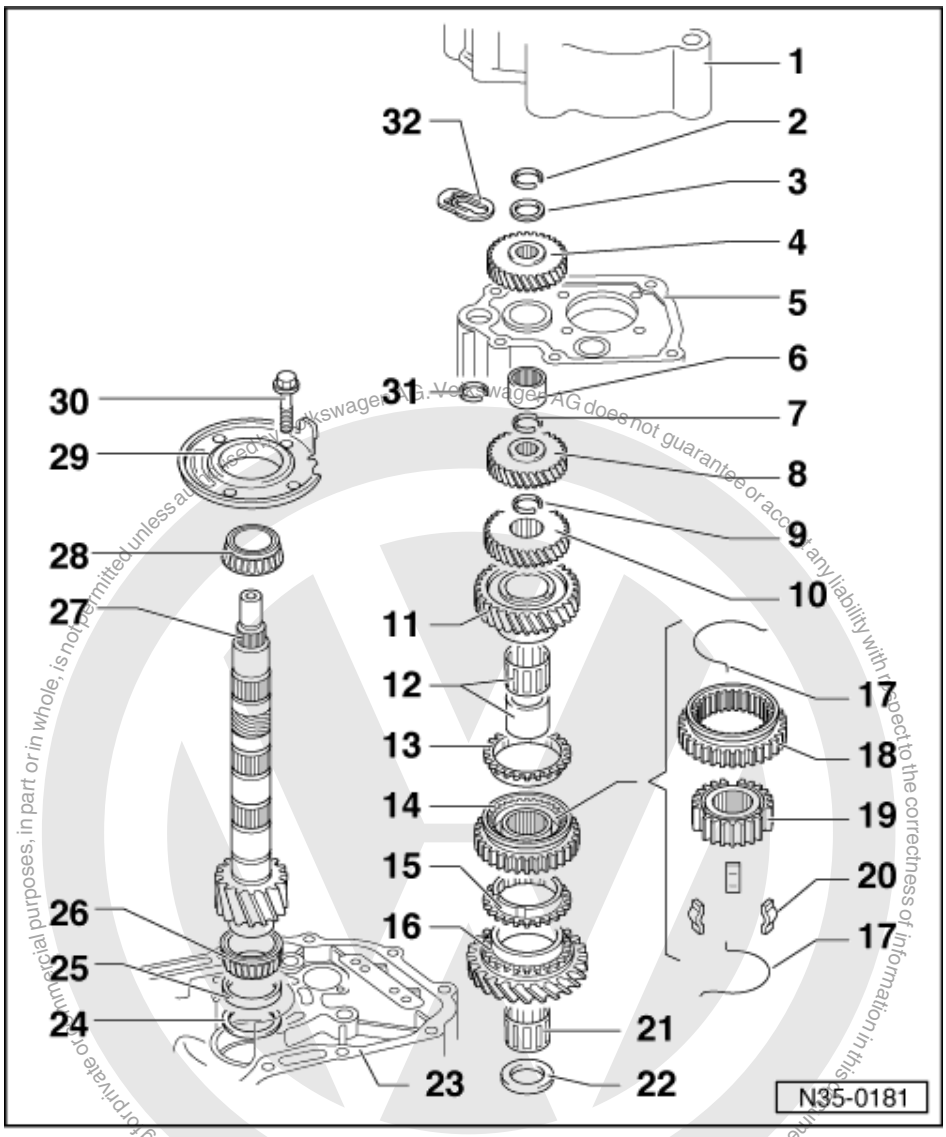

7 4th gear wheel securing ring
- Renew

8 4th gear wheel
- Vehicles with a 2.0 ltr. engine have an additional securing ring to 3rd gear => item 31
- On vehicles with 2.0 ltr. engine inner diameter matched to larger diameter of output shaft

9 3rd gear wheel securing ring
- Renew
- Redetermining thickness
  => from page 107
- Diameter enlarged on vehicles with 2.0 ltr. engine => from page 107

satelettronica

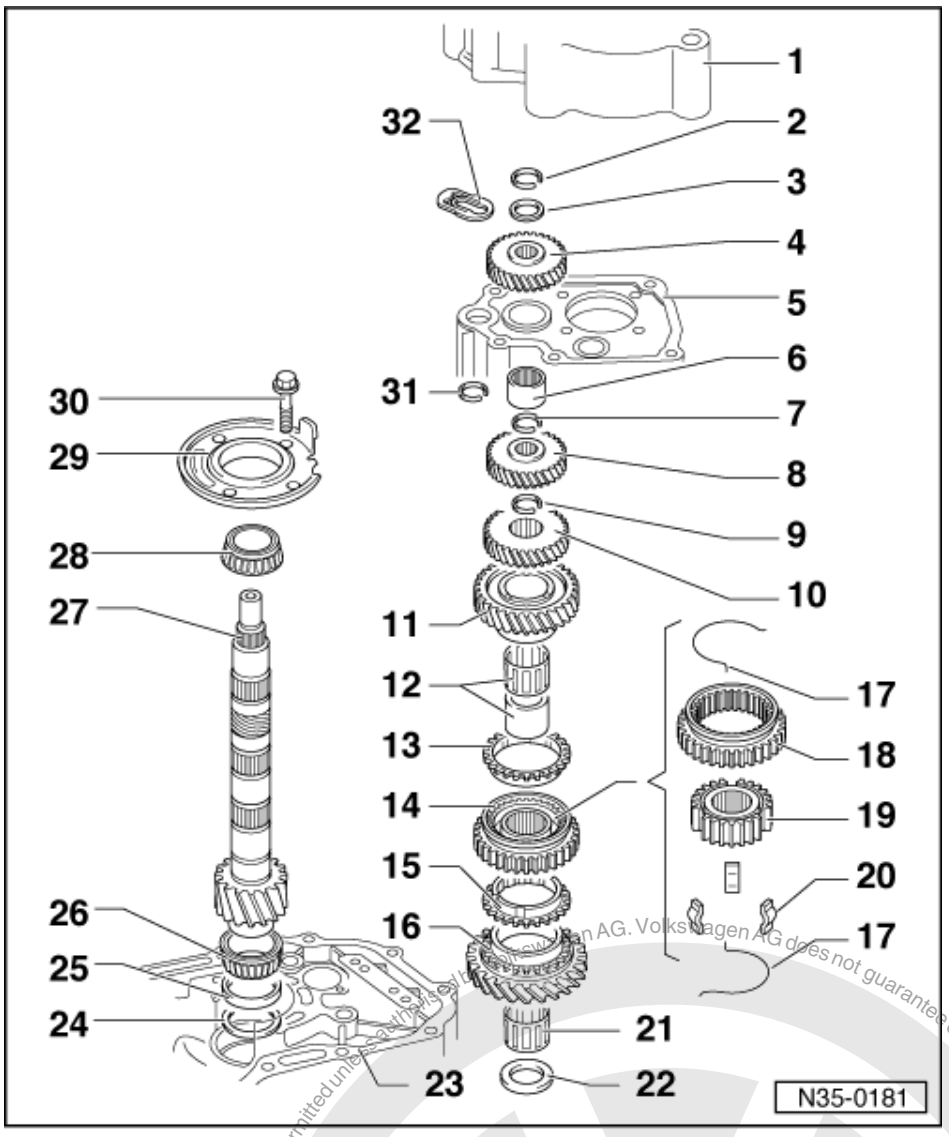

10 3rd gear wheel
- Installation position => from page 107
- Adjusting axial play => from page 107

11 2nd gear wheel

12 2nd gear wheel needle bearing
- Pulling off inner race => from page 107
- Pressing on inner race => from page 107

13 2nd gear synchro-ring
- Checking for wear
  => Fig. 1

14 1st and 2nd gear locking collar with synchro-hub
- Assembling locking collar/synchro hub => Fig. 3 and Fig. 4
- Removing and installing
  => from page 107

satelettronica
Protected by copyright. Copying for private or commercial purposes, in whole or in part, is not permitted unless authorised by Volkswagen AG. Volkswagen AG does not guarantee or accept any liability with respect to the correctness of information in this document. Copyright by Volkswagen AG.

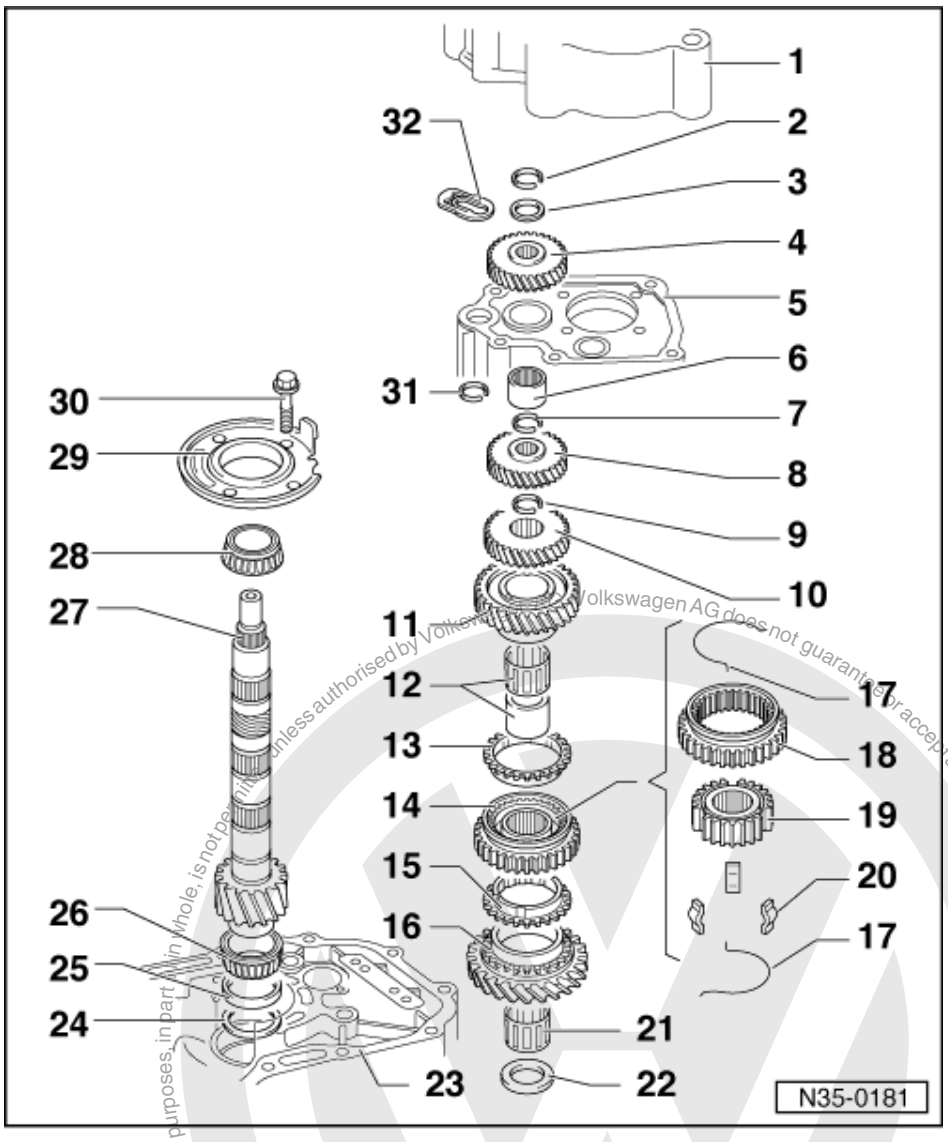

15 1st gear synchro-ring
- Checking for wear => Fig. 1
- Identification => Fig. 2

16 1st gear wheel
17 Spring
18 Locking collar
19 Synchro-hub
20 Lock pieces (Qty. 3)
21 Needle roller bearing
- For 1st gear

22 Thrust washer
- Installation position => from page 107

23 Clutch housing

Protected by copyright. Copying for private or commercial purposes, in part or in whole, is not permitted unless authorised by Volkswagen AG. Volkswagen AG does not guarantee or accept any liability with respect to the correctness of information in this document. Copyright by Volkswagen AG.
satelettronica

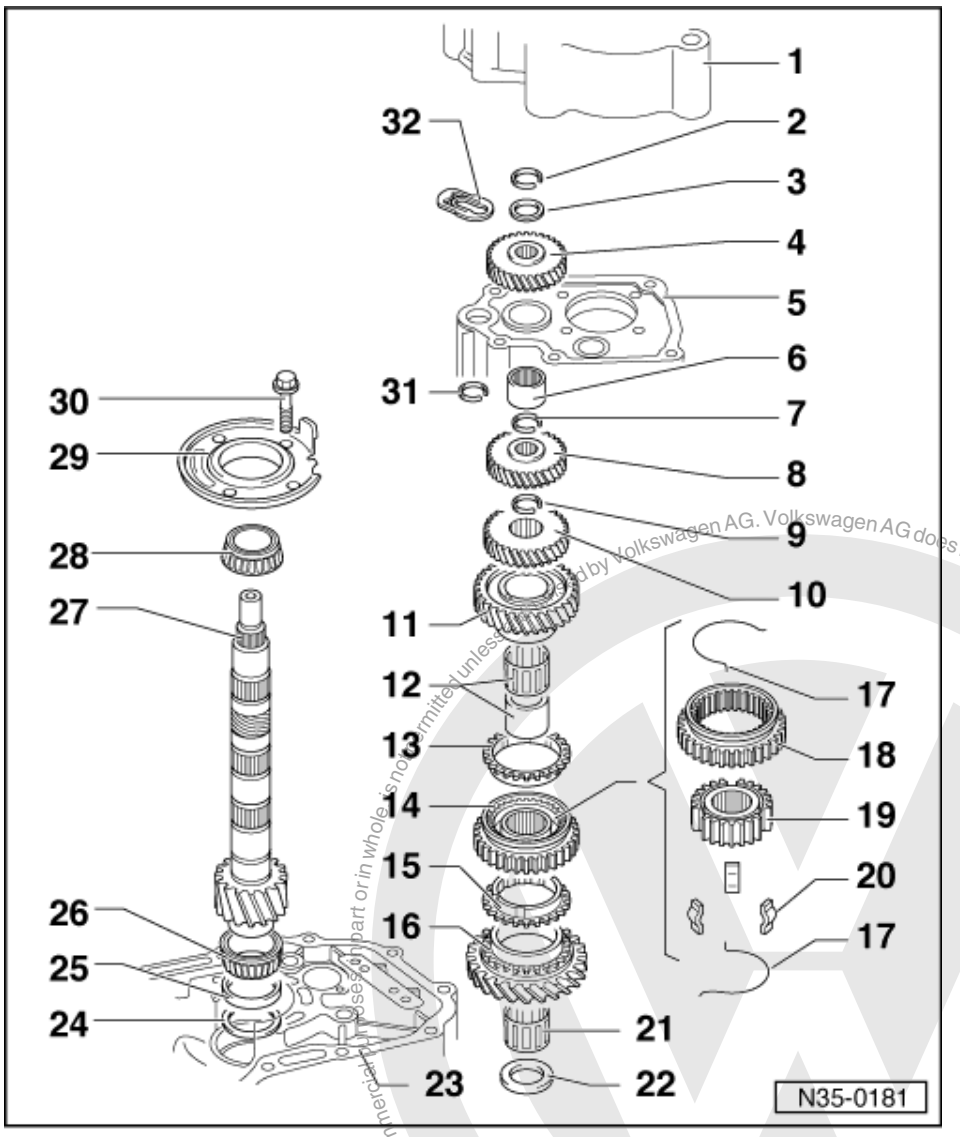

24 Shim
- For output shaft
- Adjustment overview
  => Page 193

25 Small taper roller bearing outer race
- Pulling out => Fig. 5
- Pressing in => Fig. 6

26 Small taper roller bearing inner race
- Pulling off => Fig. 7
- Pressing on => Fig. 9

27 Output shaft
- Is paired with final drive gear wheel, always renew together as a set
- With additional groove for 4th gear wheel securing ring for vehicles with 2.0 ltr. engine => Page 169
- Adjusting => Page 170

Protected by copyright. Copying for private or commercial purposes, in part or in whole, is not permitted unless authorised by Volkswagen AG. Volkswagen AG does not guarantee or accept any liability with respect to the correctness of information in this document. Copyright by Volkswagen AG.
satelettronica

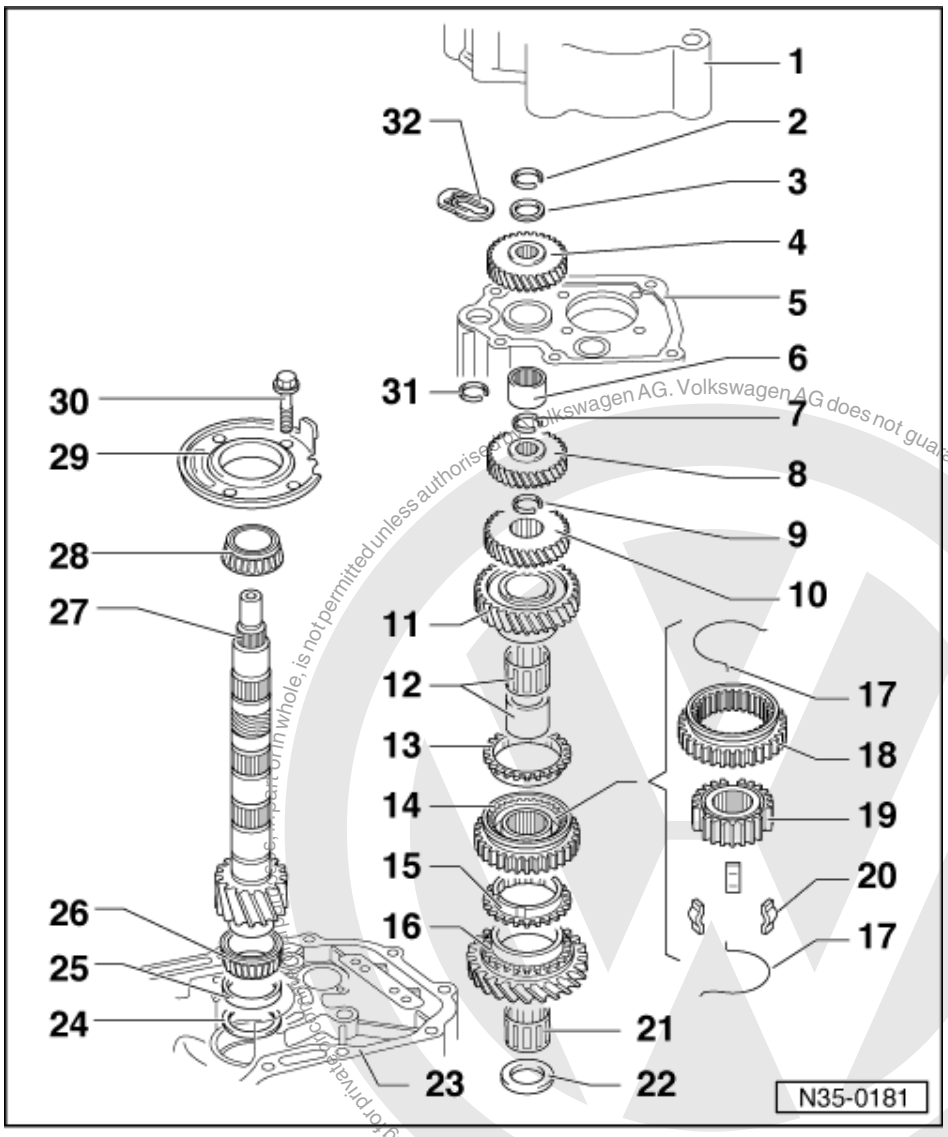

Protected by copyright. Copying for private or commercial purposes, in part or in whole, is not permitted unless authorised by Volkswagen AG. Volkswagen AG does not guarantee or accept any liability with respect to the correctness of information in this document. Copyright by Volkswagen AG.

28 Large taper roller bearing inner race

- Pulling off => Fig. 8
- Pressing on => Fig. 9

29 Bearing support

- With large taper roller bearing outer race and stop for reverse gear wheel
- Only change outer race together with large taper roller bearing and bearing support

30 Hexagon bolt, 25 Nm then turn 90°further

31 4th gear wheel securing ring

- Additional on vehicles with 2.0 ltr. engine

32 5th gear wheel securing plate

- Install only on vehicles with 2.0 ltr. engine

satelettronica

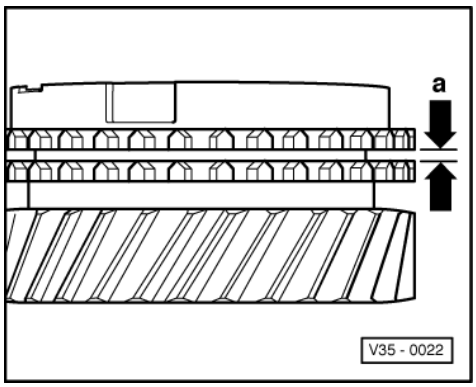

-> Fig.1 Checking synchro-ring for wear

- Press synchro-ring onto the gear wheel cone and measure gap "a" with feeler gauge.

Gap "a"	New dimension	Wear limit
1st and 2nd gear	1.2 ... 1.8 mm	0.5 mm

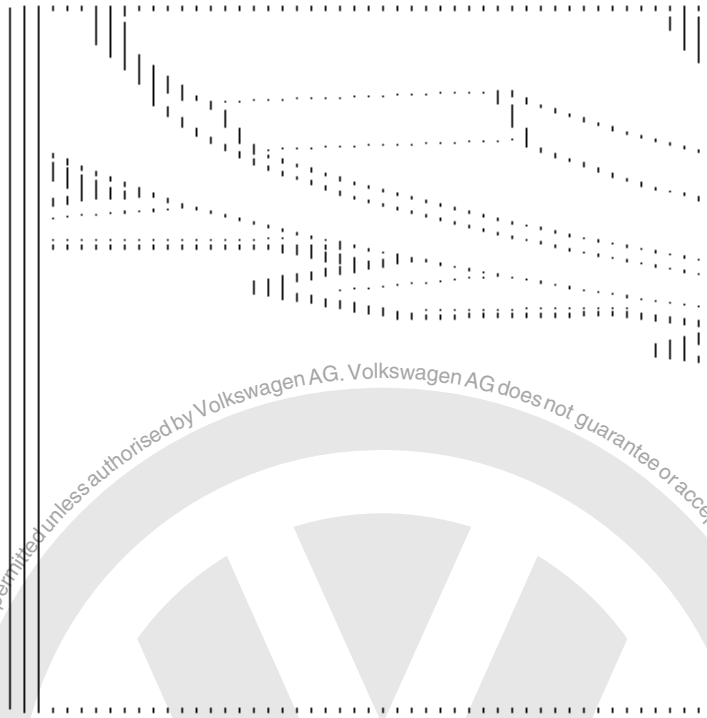

-> Fig.2 Identifying 1st gear synchro-ring

Identification: 3 teeth missing (arrow).

This synchro-ring must only be fitted to 1st gear.

satelettronica
Protected by copyright. Copying for private or commercial purposes, in part or in whole, is not permitted unless authorised by Volkswagen AG. Volkswagen AG does not guarantee or accept any liability with respect to the correctness of information in this document. Copyright by Volkswagen AG.

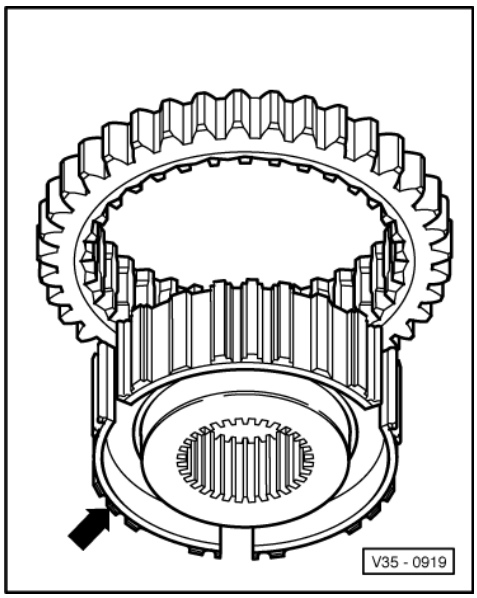

-> Fig.3 Assembling 1st and 2nd gear locking collar and synchro-hub

Installation position of synchro-hub:

Identification shallow groove on face end (arrow) faces toward outer splines of locking collar.

- Slide locking collar over synchro-hub.

The recesses for locking pieces in synchro-hub and locking collar must align.

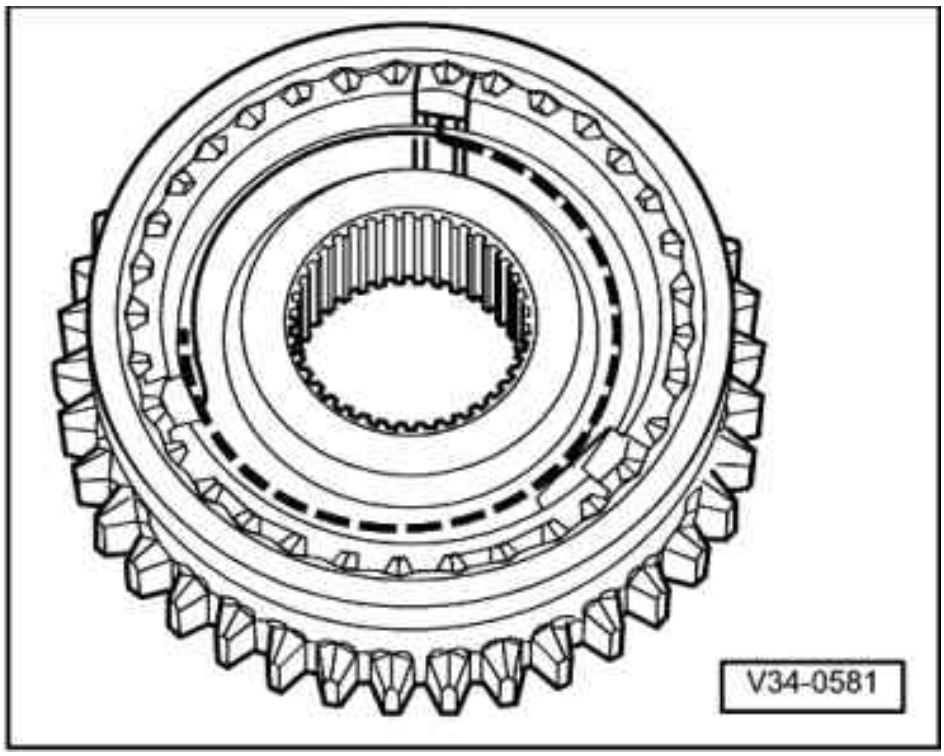

-> Fig.4 Assembling 1st and 2nd gear locking collar/synchro-hub

- Insert locking pieces and install springs 120° off-set. The angled end of the spring must locate in the hollow locking piece.

Protected by copyright. Copying for private or commercial purposes, in part or in whole, is not permitted unless authorised by Volkswagen AG. Volkswagen AG does not guarantee or accept any liability with respect to the correctness of information in this document. Copyright by Volkswagen AG.
satelettronica

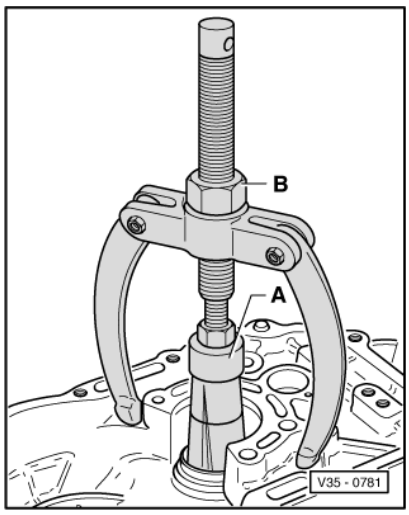

-> Fig.5 Pulling out small taper roller bearing outer race

A - Internal extractor 37 ... 46 mm, e.g. Kukko 21/6

B - Counter support, e.g. Kukko 22/2

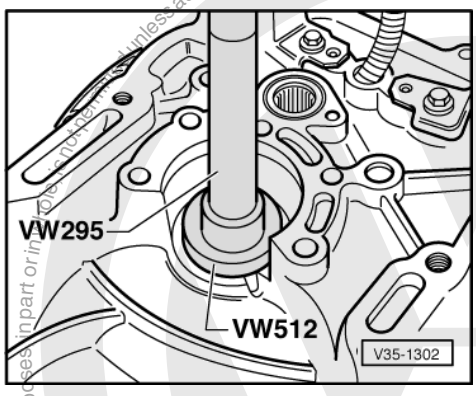

-> Fig.6 Pressing in small taper roller bearing outer race

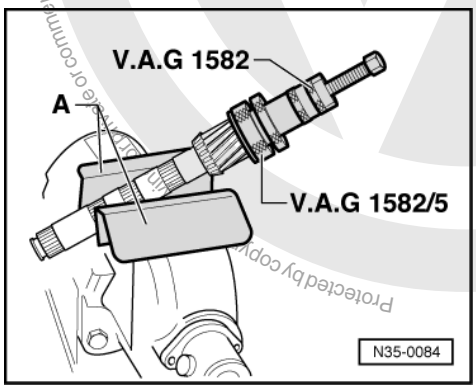

-> Fig.7 Pulling off small taper roller bearing inner race

A - Vice clamps/vice

satelettronica

- Fit gripping device and tension behind bearing rollers, then turn bearing and retension gripping device.

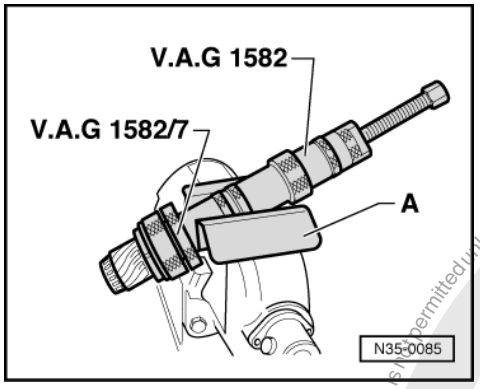

-> Fig.8 Pulling off large taper roller bearing inner race

A - Vice clamps/vice

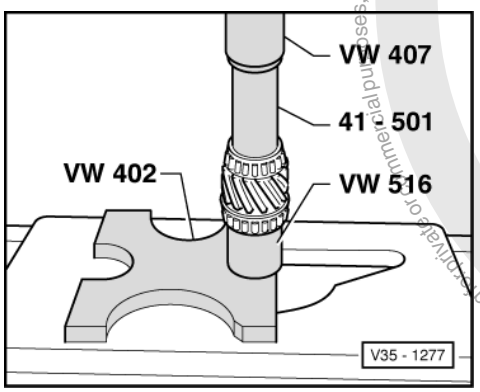

-> Fig.9 Heating small and large taper roller bearing inner race to about 100° C, fitting and pressing home

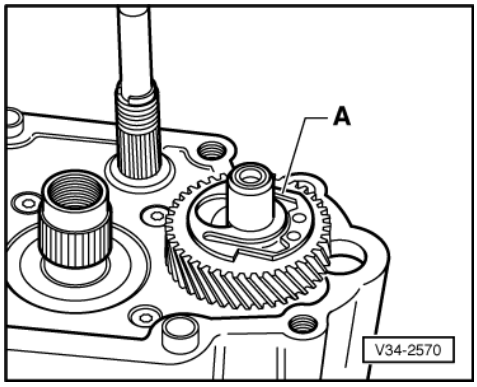

Protected by copyright. Copying for private or commercial purposes, in part or in whole, is not permitted unless authorised by Volkswagen AG. Volkswagen AG does not guarantee or accept any liability with respect to the correctness of information in this document. Copyright by Volkswagen AG.
satelettronica

-> Fig.10 Securing method for 5th gear wheel on vehicles with 2.0 ltr. engine with securing plate -A-

Protected by copyright. Copying for private or commercial purposes, part or in whole, is not permitted unless authorised by Volkswagen AG. Volkswagen AG does not guarantee or accept any liability with respect to the correctness of information in this document. Copyright by Volkswagen AG.

2.2 - Allocating output shafts

Note:

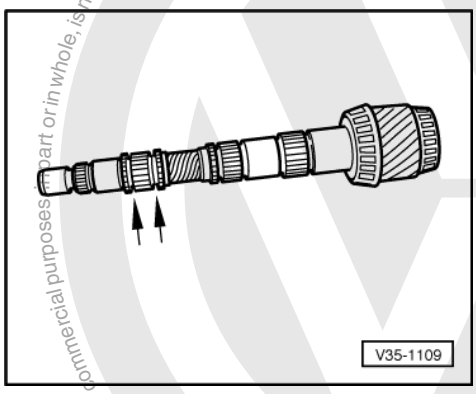

Vehicles with 2.0 ltr. engine, output shaft with enlarged diameter for inner splines of 4th gear wheel. Additional securing ring for 3rd gear.

-> Output shaft of vehicles with 2.0 ltr. engine

(Location of securing ring for 4th gear wheel => arrows)

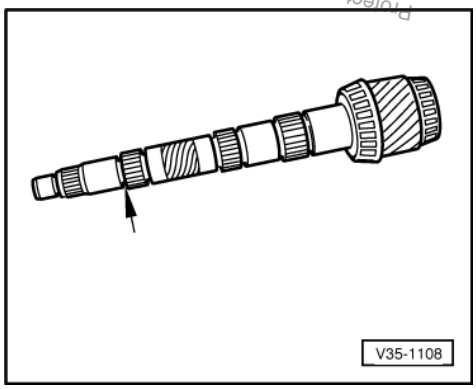

-> Output shaft of all other vehicles

(Location of securing ring for 4th gear wheel => arrow)

satelettronica

3 - Adjusting output shaft

3.1 - Adjusting output shaft

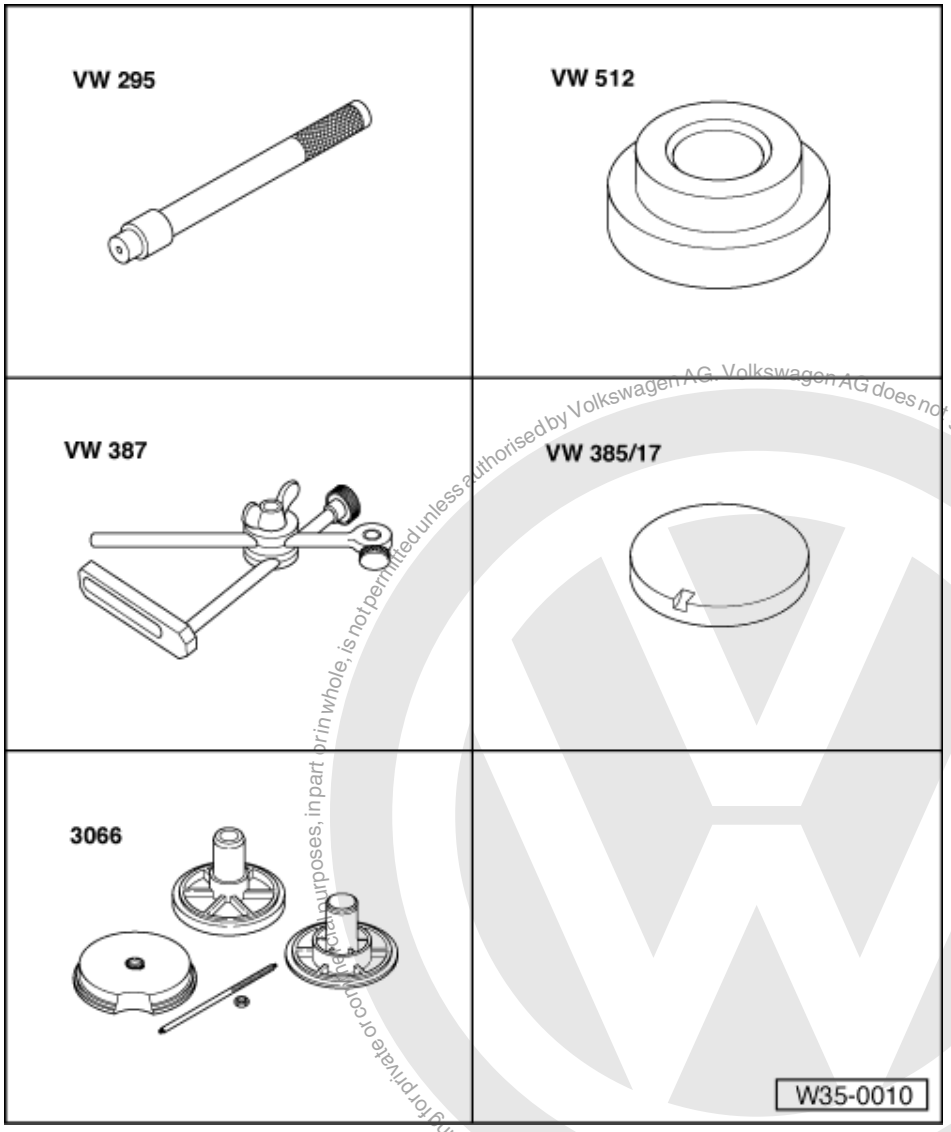

(Determining shim for output shaft)

Special tools and workshop equipment required

- VW 295 Drift
- VW 512 Press disk
- VW 387 Universal dial gauge bracket
- VW 385/17 End measuring plate
- 3066 Spindle from assembly tool
- Dial gauge

It is necessary to readjust the output shaft when

- Final drive
- Clutch housing

or

Protected by copyright. Copying for private or commercial purposes, in part or in whole, is not permitted unless authorised by Volkswagen AG. Volkswagen AG does not guarantee or accept any liability with respect to the correctness of information in this document. Copyright by Volkswagen AG.
satelettronica

- Taper roller bearing

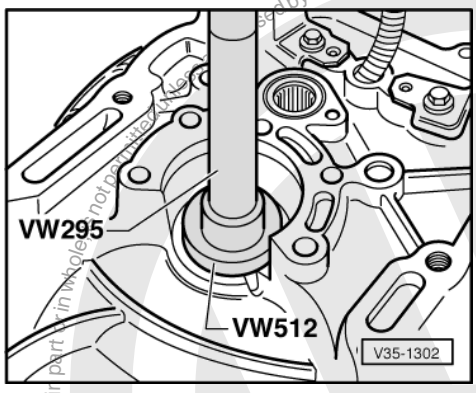

have been changed.

Adjustment overview => Page 193

- -> Press small taper roller bearing outer race together with a 0.65 mm thick shim fully into clutch housing.
- Insert output shaft and tighten bearing support securing bolts to 25 Nm and then turn 90° further.

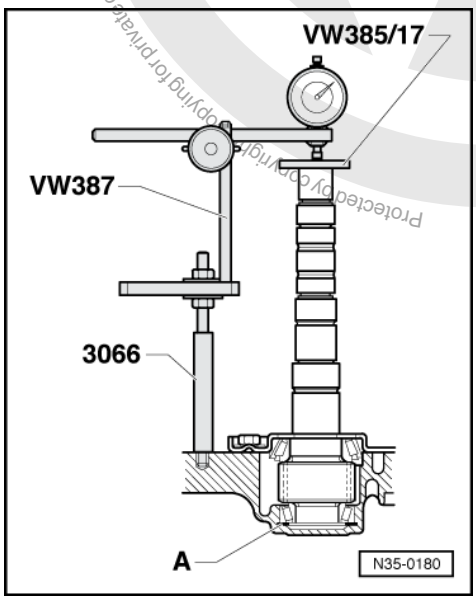

- -> Mount dial gauge (3 mm measuring range) and set to "0" with 1 mm preload.

  A - Shim 0.65 mm thick

- Move output shaft up and down and note dial gauge reading (example: 0.30 mm).

Note:

Do not turn the output shaft whilst measuring, otherwise the bearing will settle and a false reading will be given.

Determining thickness of shim

The specified bearing preload is obtained by adding
a constant preload figure of (0.20 mm)
to the reading obtained (0.30 mm)
and the thickness of the shim installed (0.65 mm).

Example:

Protected by copyright. Copying for private or commercial purposes, in part or in whole, is not permitted unless authorised by Volkswagen AG. Volkswagen AG does not guarantee or accept any liability with respect to the correctness of information in this document. Copyright by Volkswagen AG.
satelettronica

Shim installed	0.65 mm
+ Reading	0.30 mm
+ Preload (constant)	0.20 mm
Thickness of shim	1.15 mm

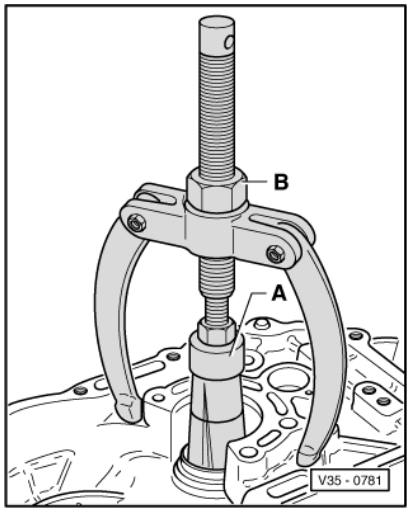

- -> Remove output shaft and pull out small taper roller bearing outer race.

A - Internal extractor 37 ... 46 mm, e.g. Kukko 21/6
B - Counter support, e.g. Kukko 22/2
The following adjustment shims are available:

Size (mm)	Part No.
0.65	020 311 391 P
0.70	020 311 391 Q
0.75	020 311 391
0.80	020 311 391 A
0.85	020 311 391 B
0.90	020 311 391 C
0.95	020 311 391 D
1.00	020 311 391 E
1.05	020 311 391 F
1.10	020 311 391 G
1.15	020 311 391 H
1.20	020 311 391 J
1.25	020 311 391 K
1.30	020 311 391 L
1.35	020 311 391 M
1.40	020 311 391 N

Varying tolerances make it possible to obtain the exact shim thickness required.

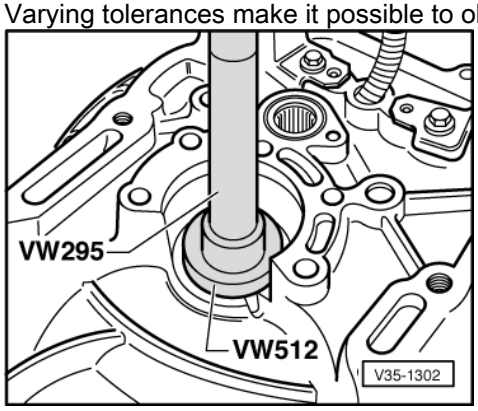

Copyright by Volkswagen AG. Volkswagen AG does not guarantee or accept any liability with respect to the correctness of information in this document. Copying for commercial purposes, in part or in whole is not permitted unless authorised by Volkswagen AG.
satelettronica

If the size of shim required is larger than those listed in the table, insert two shims totalling the correct figure.

- -> Press in small taper roller bearing outer race together with the shim as calculated (in example 1.15 mm) and install output shaft. Tighten bearing support securing bolts in clutch housing to correct tightening torque.

Protected by copyright. Copying for private or commercial purposes, in part or in whole, is not permitted unless authorised by Volkswagen AG. Volkswagen AG does not guarantee or accept any liability with respect to the correctness of information in this document. Copyright by Volkswagen AG.

satelettronica

39 - Final drive, Differential

1 - Removing and installing drive flange oil seal

1.1 - Removing and installing drive flange oil seal

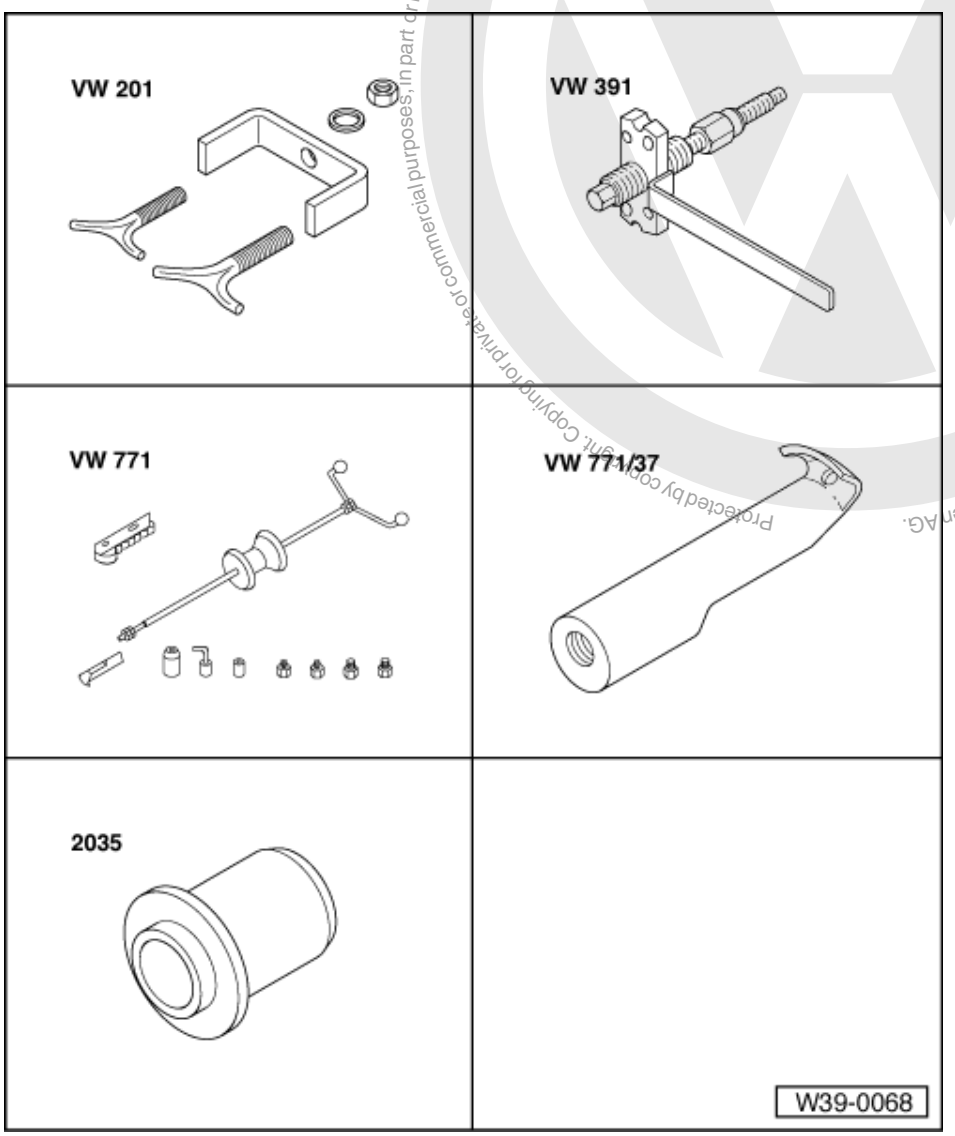

(Gearbox removed)

Special tools, testers and auxiliary items

- VW 201 Puller for oil pump
- VW 391 Drive shaft fitting appliance
- VW 771 Multi-purpose tool
- VW 771/37 Hook
- 2035 Drift

Volkswagen AG. Volkswagen AG does not guarantee or accept any liability with respect to the correctness of information in this document. Copyright by Volkswagen AG. Protected by copyright. Copying for private or commercial purposes, in part or in whole, is not permitted unless authorised by Volkswagen AG.
satelettronica

Removing

- Unbolt right drive shaft from gearbox, swing up and tie up with a wire hook.

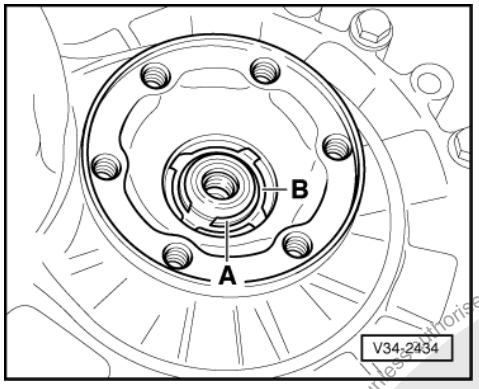

- Remove left drive shaft

=> Running gear; Repair group 40

- Pierce sealing cap in drive flange with a screwdriver and lever out.
- -> Take off securing ring -A- and dished washer -B- for drive flange.

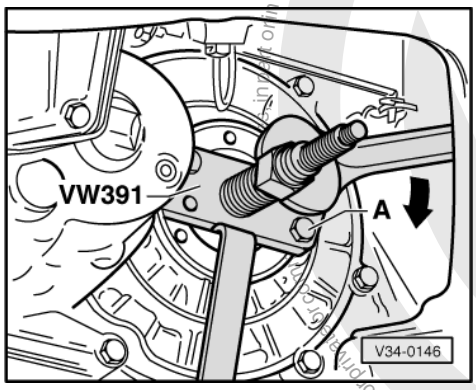

- -> Pull off drive flange with VW 391.

A - Insert two M 8 x 30 hexagon bolts through the slots into the drive flange.

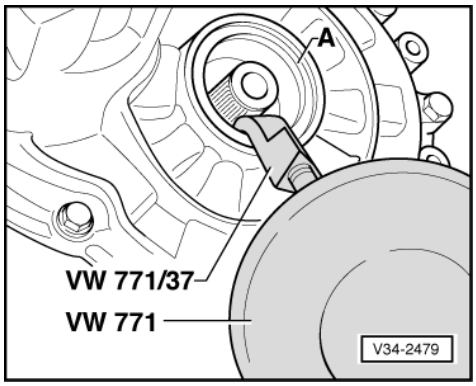

- -> Pull out seal -A-.

Protected by copyright. Copyright by Volkswagen AG. Volkswagen AG does not guarantee or accept any liability with respect to the correctness of information in this document. Copyright by Volkswagen AG. in part or in whole is not permitted unless authorised by Volkswagen AG.
satelettronica

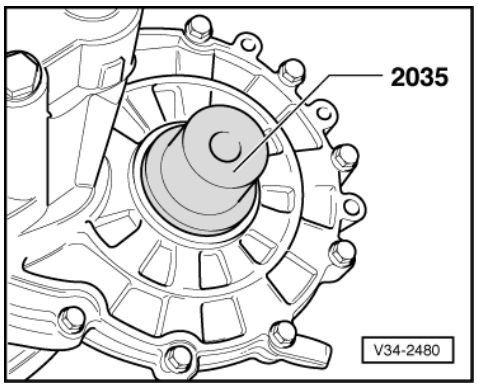

Installing

- -> Drive new seal onto stop.
- Fill gap between sealing and dust lips with multi-purpose grease.

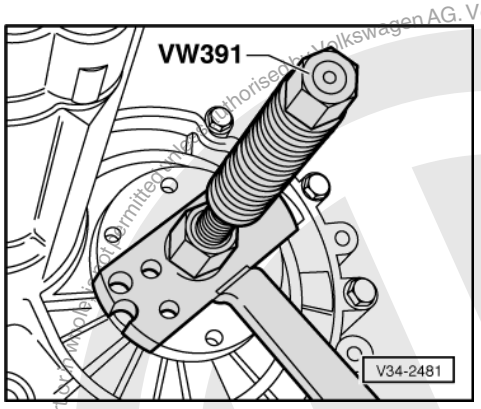

- -> Pull drive flange in.
- Counterhold assembly tool spindle with spanner.

Note:

All the illustrations show the left drive flange. Removal and installation of the right drive flange and the right seal is identical.

- Install dished washer and circlip.

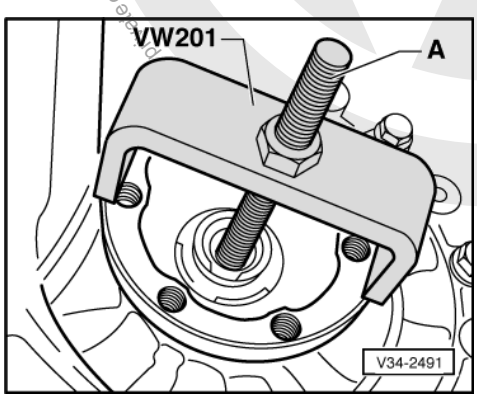

-> Note:

If the drive flange is pressed off the gearbox by the spring after pulling the drive flange in, fit special tool VW 201 before inserting the securing ring.

satelettronica

A - Threaded rod with M 10 nut

- Press in a new cap.
- Install drive shaft, tighten bolts to 45 Nm.
- Check gearbox oil level and if necessary top up to lower edge of filler hole.

Gear oil specification => Page 2

2 - Dismantling and assembling differential

2.1 - Dismantling and assembling differential

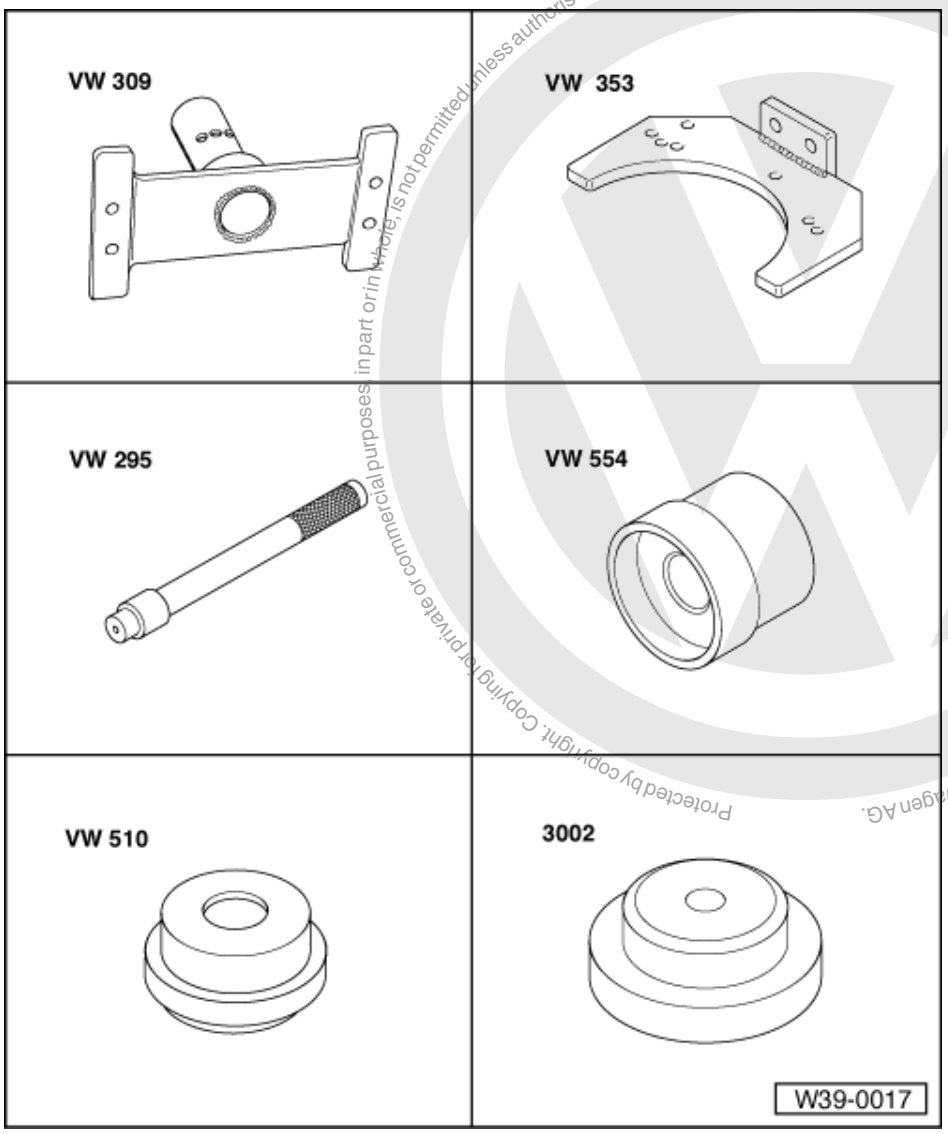

Protected by copyright. Copying for private or commercial purposes, in part or in whole, is not permitted unless authorised by Volkswagen AG. Volkswagen AG does not guarantee or accept any liability with respect to the correctness of information in this document. Copyright by Volkswagen AG.
satelettronica

Special tools and workshop equipment required

- VW 309 Holding plate
- VW 353 Gearbox support
- VW 295 Drift
- VW 554 Press piece
- VW 510 Press disk

- 3002 Press piece

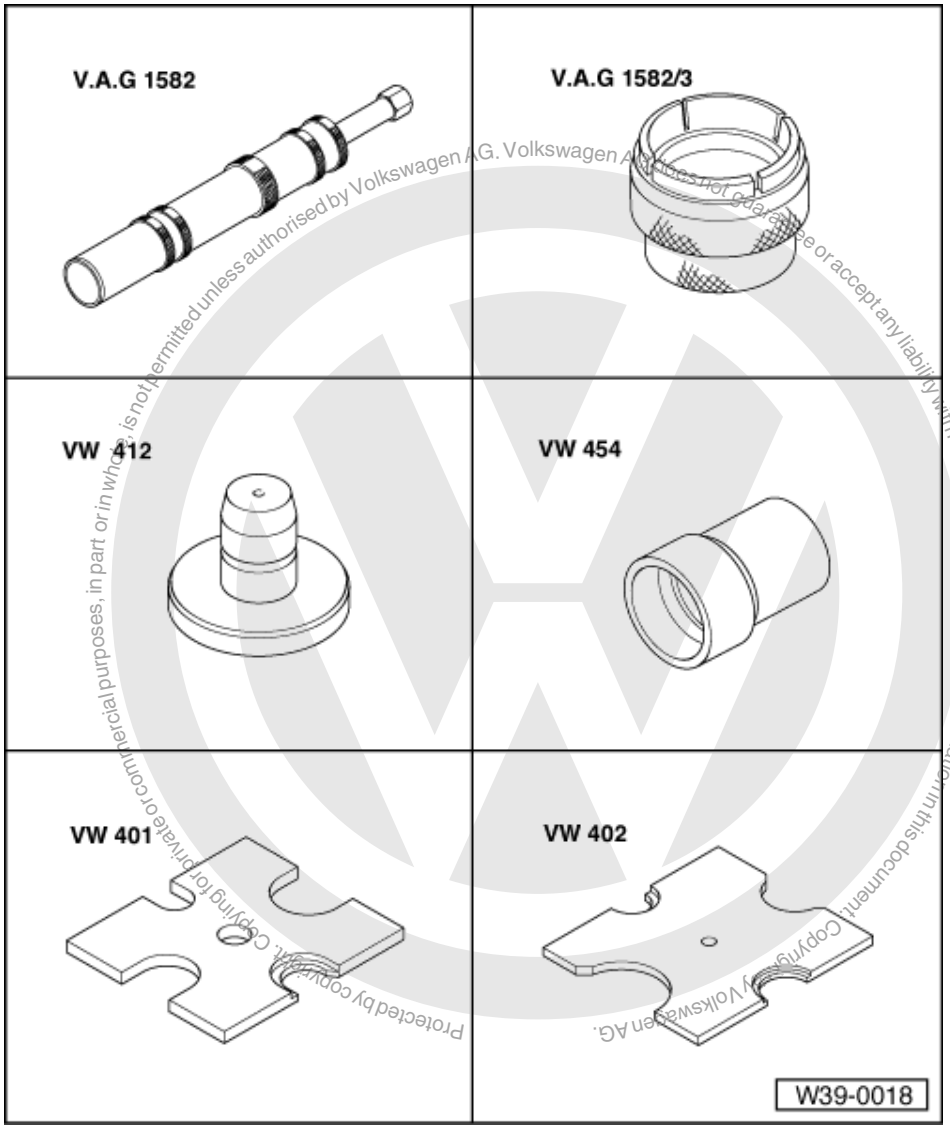

Protected by copyright. Copying for private or commercial purposes, in part or in whole, is not permitted unless authorised by Volkswagen AG. Volkswagen AG does not guarantee or accept any liability with respect to the correctness of information in this document. Copyright by Volkswagen AG.

satelettronica

Special tools and workshop equipment required

- V.A.G 1582 Puller
- V.A.G 1582/3 Grip
- VW 412 Press tool
- VW 454 Press piece
- VW 401 Press plate
- VW 402 Press plate

Special tools and workshop equipment required

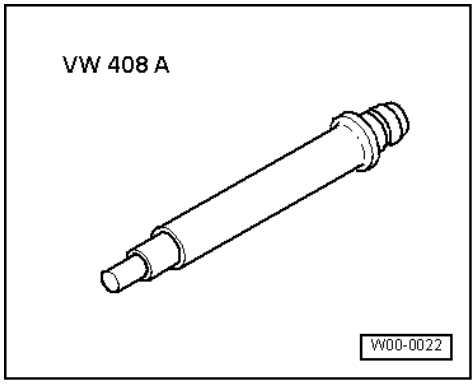

- VW 408 a Press tool

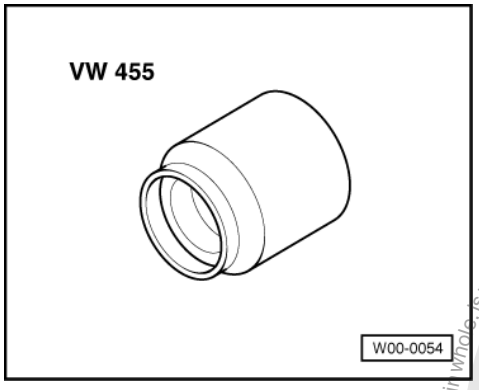

- VW 455 Press sleeve

Protected by copyright. Copying for private or commercial purposes, in part or in whole, is not permitted unless authorised by Volkswagen AG. Volkswagen AG does not guarantee or accept any liability with respect to the correctness of information in this document. Copyright by Volkswagen AG.
satelettronica

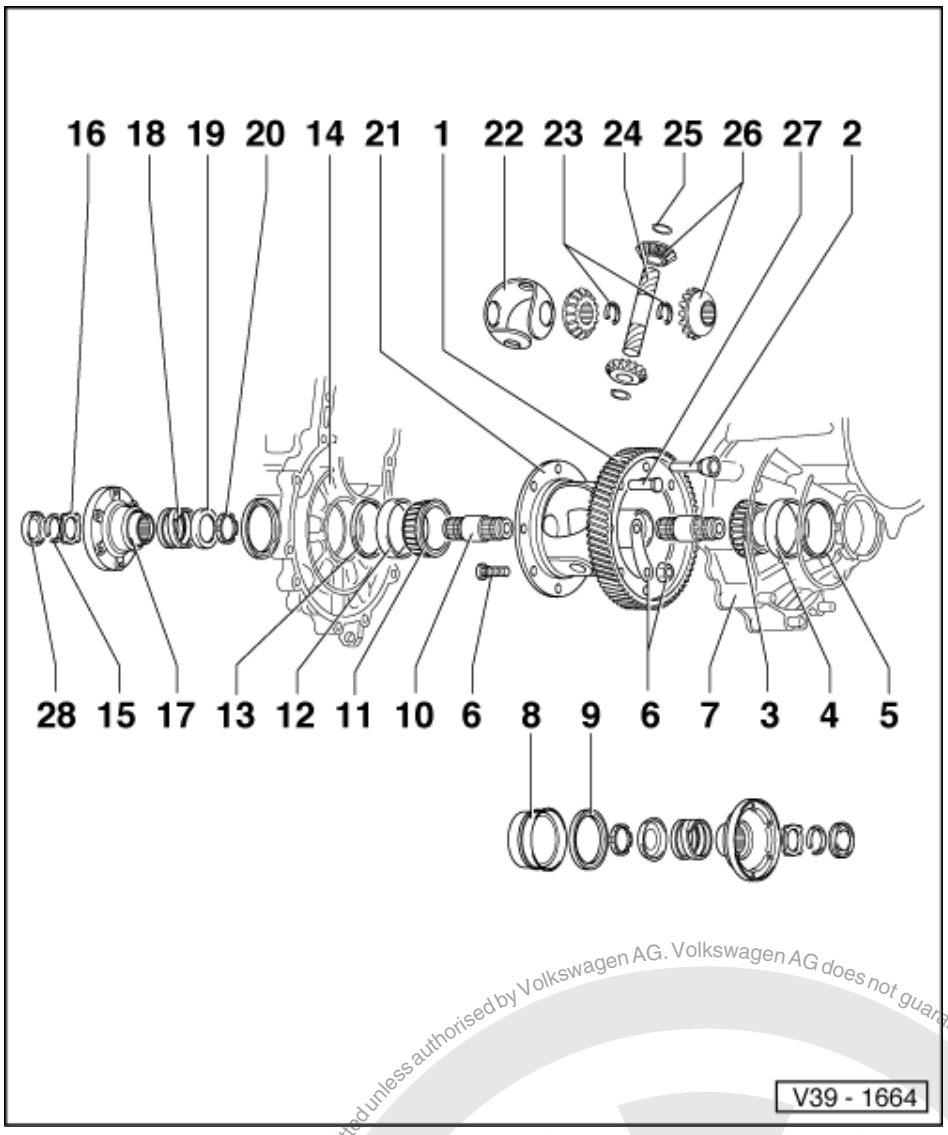

Notes:

- Heat taper roller bearing inner race to 100 °C before installing.
- Always renew both taper roller bearings together as a set.
- If differential housing, gearbox housing or clutch housing taper roller bearings are renewed adjust differential => Page 190 .

1 Final drive gear wheel
- Rivetted in production
- Bolted => Fig. 11
- Heat to 100 °C before installing
- Pressing off => Fig. 9
- Fit to differential housing => Fig. 10
- Is paired with output shaft, only renew as a set

Protected by copyright. Copying for private or commercial purposes, in part or in whole, is not permitted unless authorised by Volkswagen AG. Volkswagen AG does not guarantee or accept any liability with respect to the correctness of information in this document. Copyright by Volkswagen AG.
satelettronica

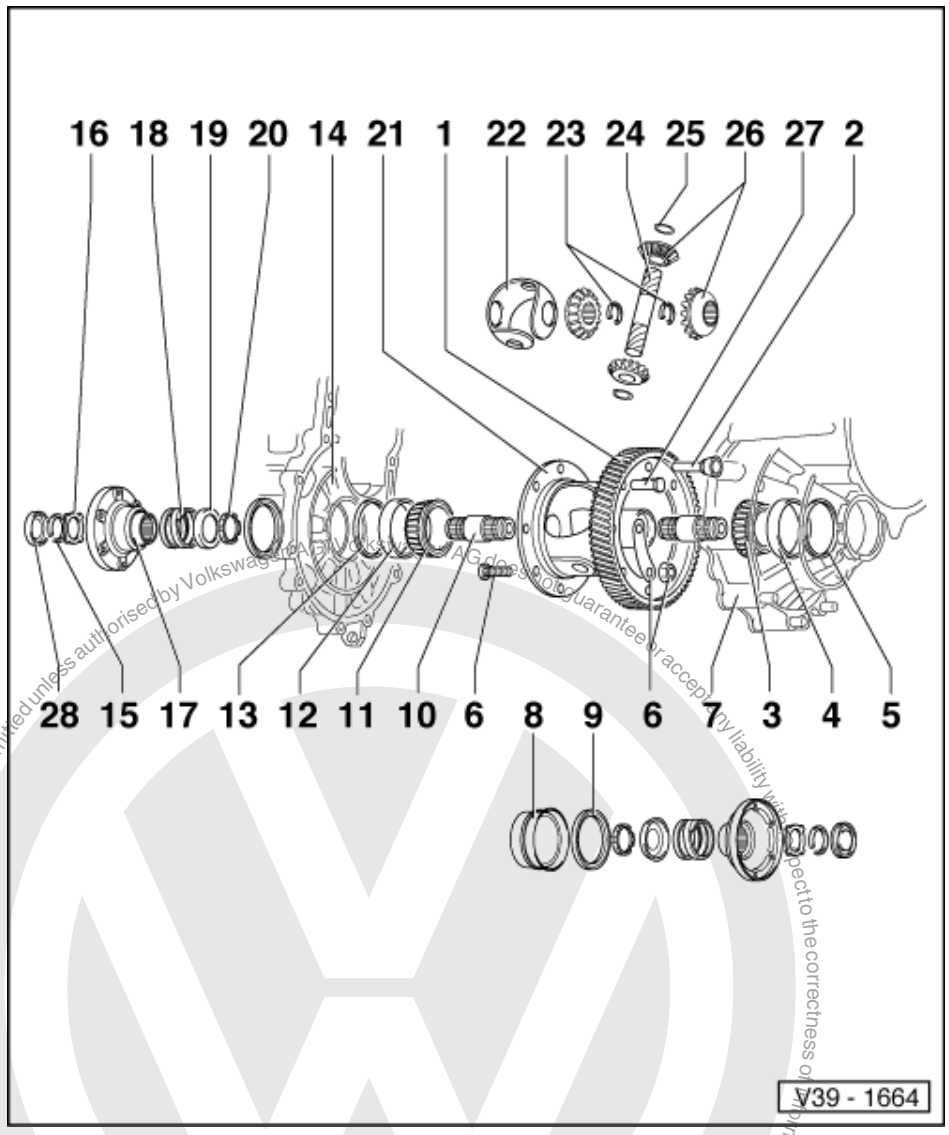

2 Cup head rivet
- Removing => Fig. 8
- For securing planet pinion axis shaft
- Secure shaft with securing rings in cases of repair

3 Taper roller bearing inner race
- Pulling off => Fig. 3
- Pressing on => Fig. 4
- First remove output shafts/drive flange (item 10)

4 Taper roller bearing outer race
- Driving out => Fig. 1 , first remove sleeve (item 8)
- Driving in => Fig. 2

5 Shim S2
- Always 1 mm thick

satelettronica

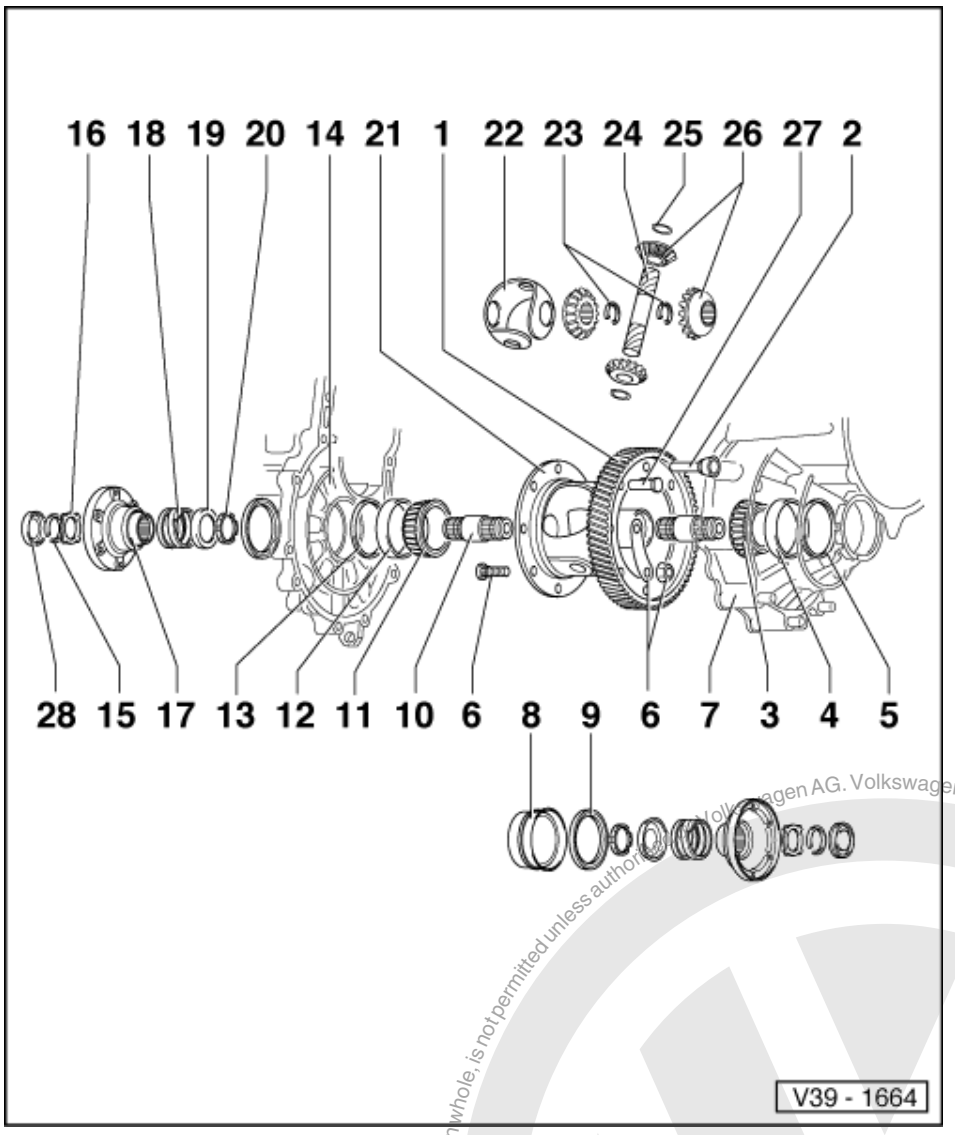

6 Repair kit
- Only for Service department
- Installing => Fig. 11
- Hexagon nut, 65 Nm

7 Clutch housing

8 Sleeve
- Removing and installing => from page 141

9 Oil seal
- Removing and installing => Page 174

10 Output shaft/drive flange
- When dismantling first remove securing ring (item 23)
- Turn slightly when pulling out
- Press in carefully when installing
- Install thread facing drive flange

Protected by copyright. Copyright by Volkswagen AG. Volkswagen AG does not guarantee or accept any liability with respect to the correctness of information in this document. Copyright by Volkswagen AG. Volkswagen AG, in part or in whole, is not permitted unless authorized for commercial purposes, in part or in whole, is not permitted unless authorized for private or commercial purposes.
satelettronica

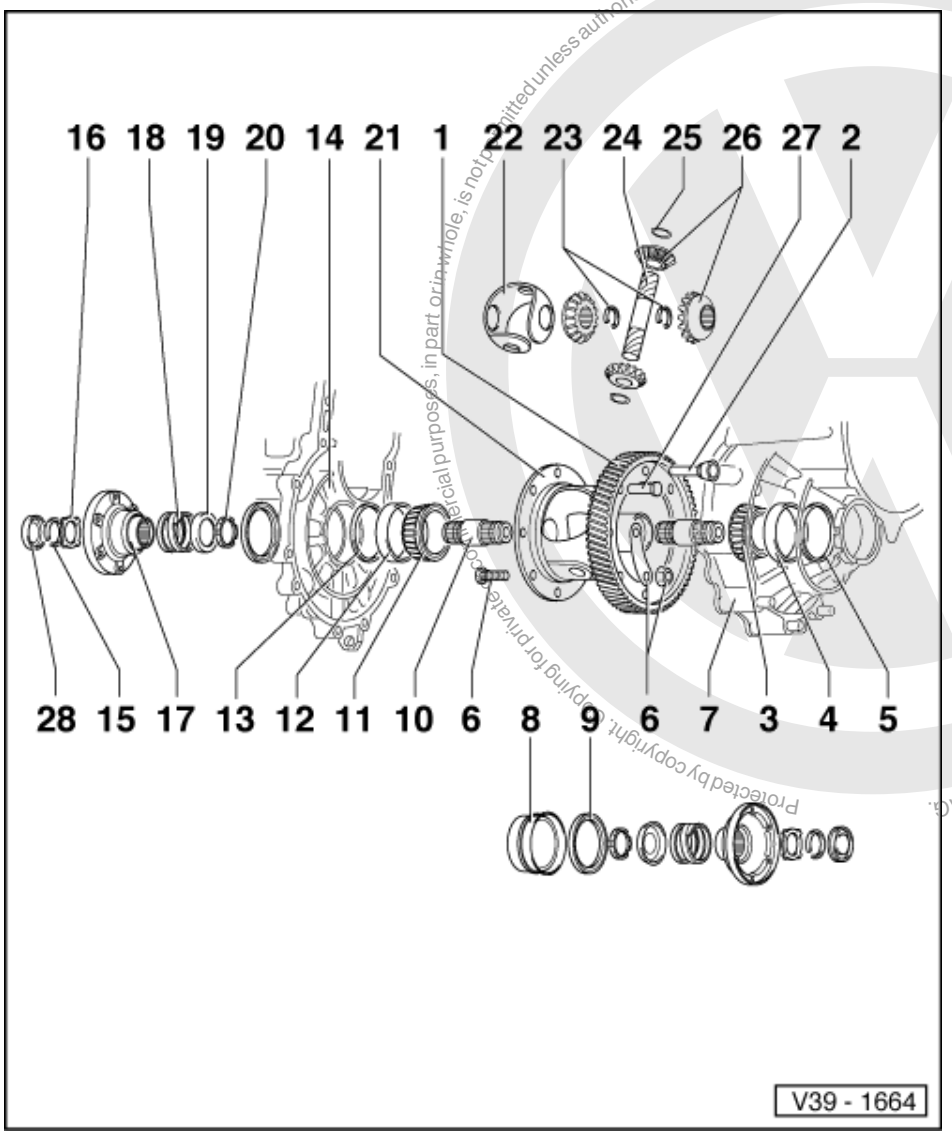

11 Taper roller bearing inner race
- Pulling off => Fig. 3
- Pressing on => Fig. 4
- Remove output shaft/drive flanges first

12 Taper roller bearing outer race
- Driving out => Fig. 5
- Driving in => Fig. 6

13 Shim S1
- Determining thickness => Page 192

14 Gearbox housing

15 Circlip
- Renewing

16 Dished spring
- Installation position: Cone points towards circlip

17 Drive flange
- Removing and installing
  => Page 174

18 Spring

Volkswagen AG. Volkswagen AG does not guarantee or accept any liability with respect to the correctness of information in this document. Copyright by Volkswagen AG.
Protected by copyright. Copying for private and commercial purposes, in part or in whole, is not permitted unless authorised by Volkswagen AG.
satelettronica

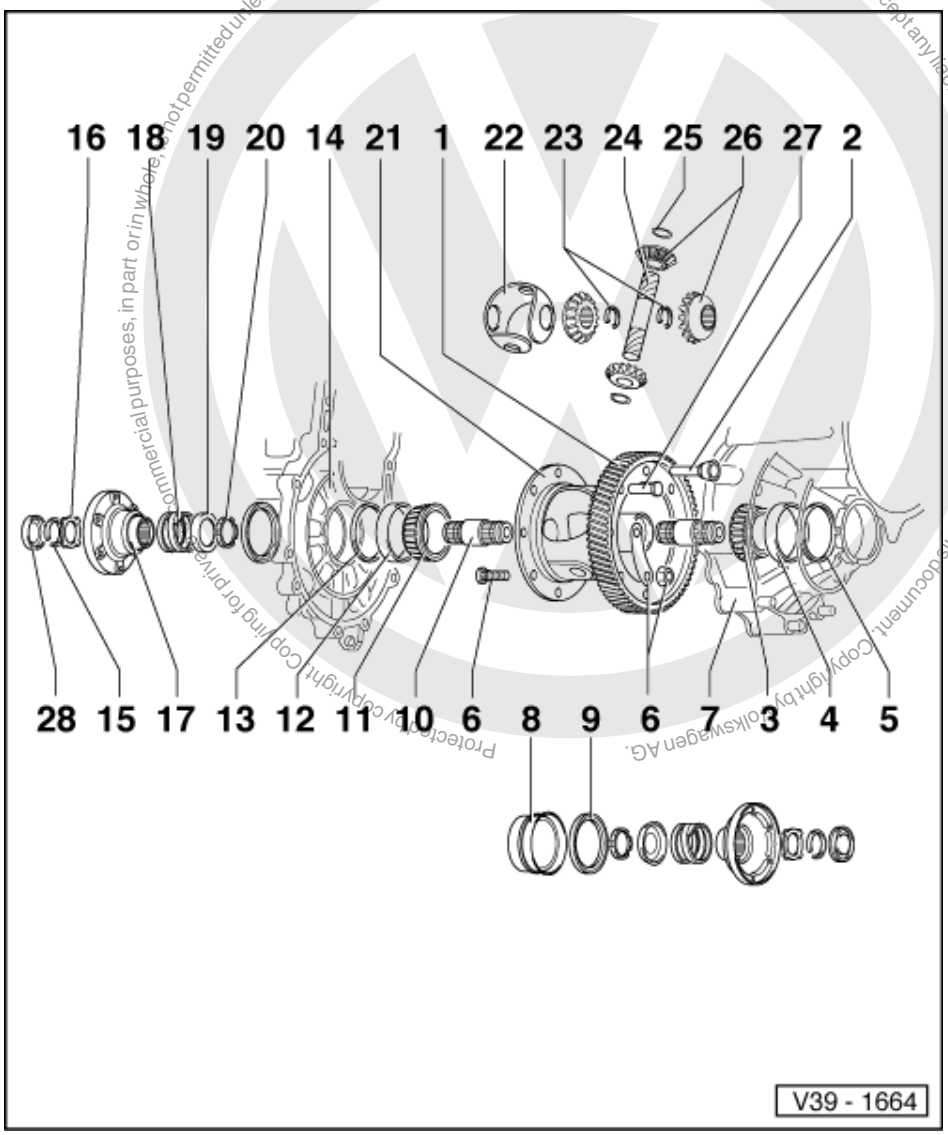

19 Thrust washer
20 Tapered ring
21 Differential cage
22 One-piece thrust washer
- Coat with gearbox oil when installing

23 Securing ring
- Secures output shaft/drive flange (item 10)

24 Planet pinion axis shaft
- Knock out with drift
- Install shaft with grooves and secure with securing ring (circlips) in cases of repair

25 Circlip
26 Differential bevel gears
- Removing => Fig. 8
- Installing => Fig. 12

satelettronica

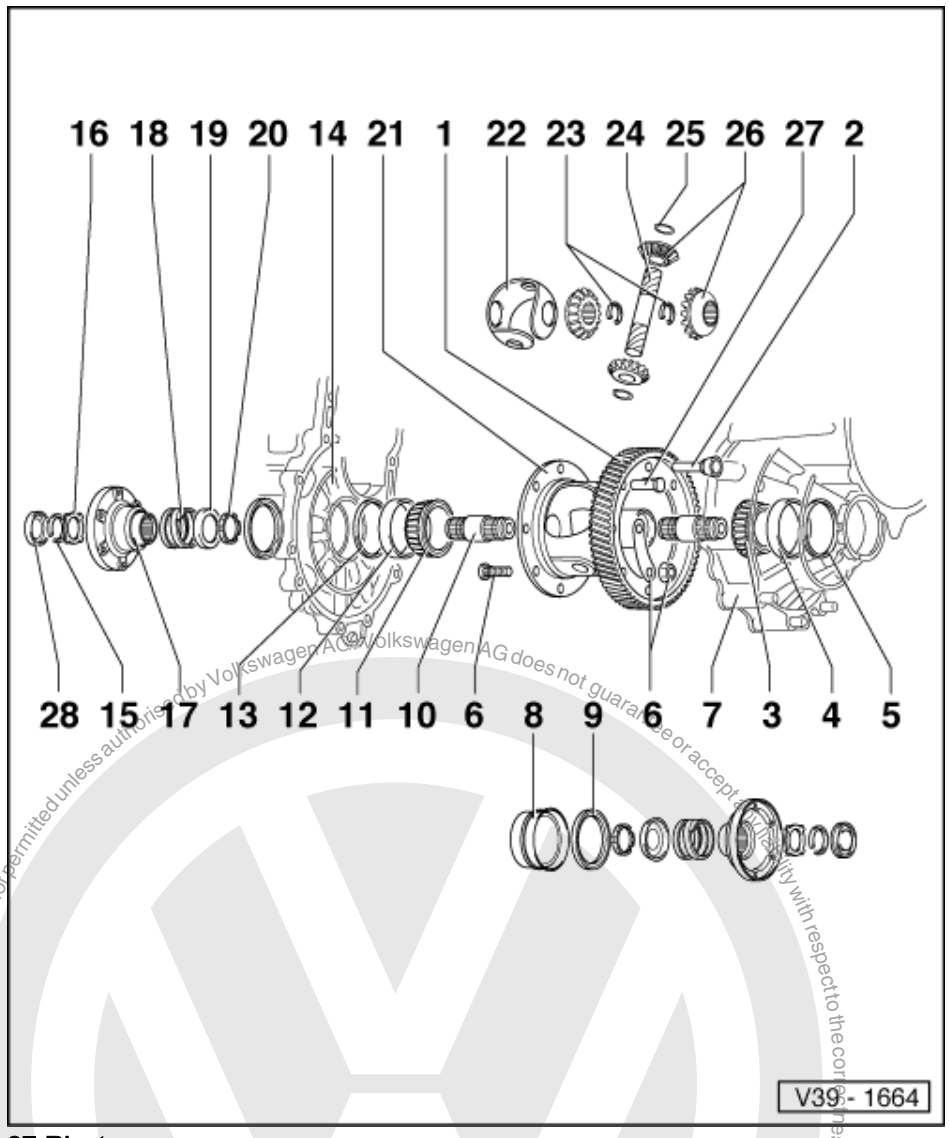

27 Rivet
- Secures final drive (crown) wheel to final drive housing
- As produced
- Drilling out => Fig. 7

28 Sealing cap
- Destroyed during removal
- Always renew

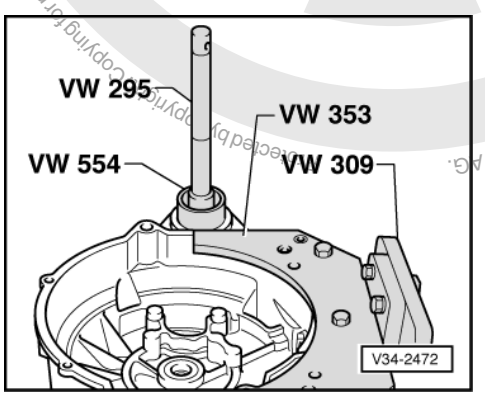

satelettronica

-> Fig.1 Knocking taper roller bearing outer race out of clutch housing

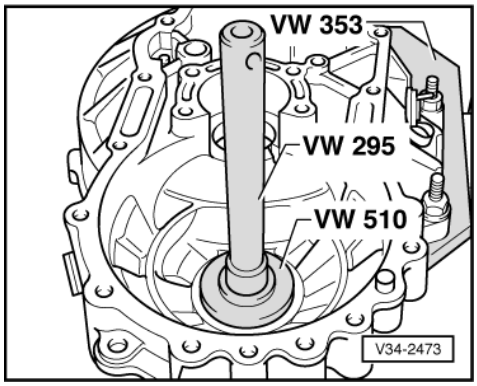

-> Fig.2 Driving taper roller bearing outer race into clutch housing

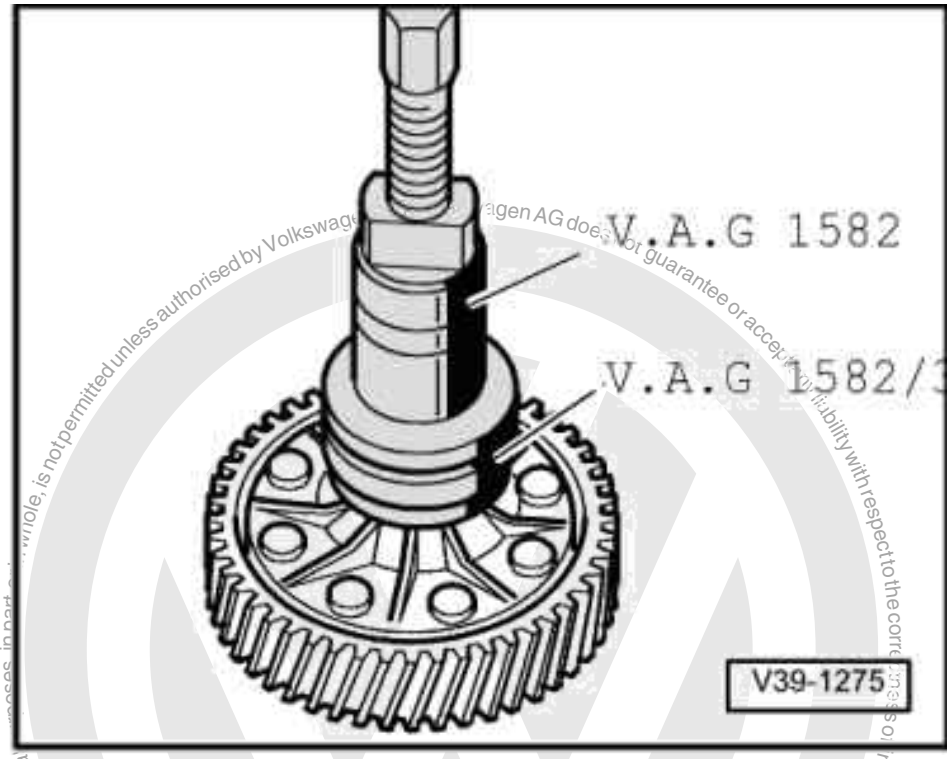

-> Fig.3 Pulling off taper roller bearing inner race

- Before fitting the extractor, position press piece 3002 on differential housing.

Note:

Both both taper roller bearing inner races are pulled off the differential housing in the same way.

satelettronica

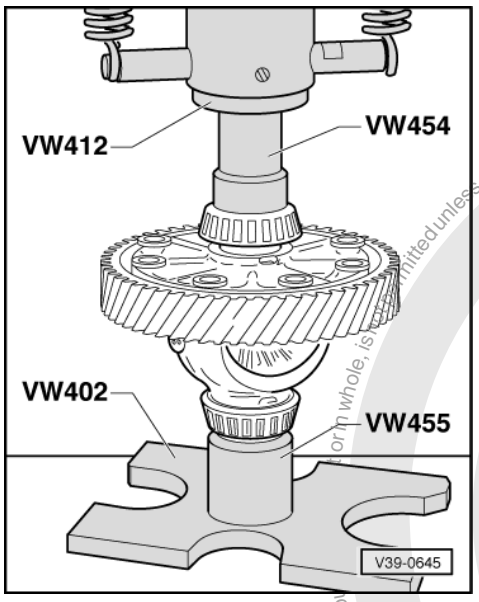

-> Fig.4 Pressing on taper roller bearing inner race

Note:

The taper roller bearing inner races for gearbox housing side and clutch housing side are pressed on with the same press tools.

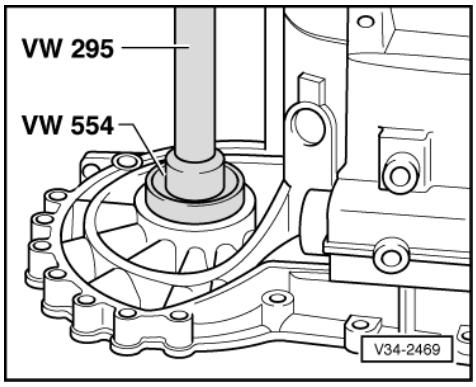

-> Fig.5 Driving taper roller bearing outer race out of gearbox housing

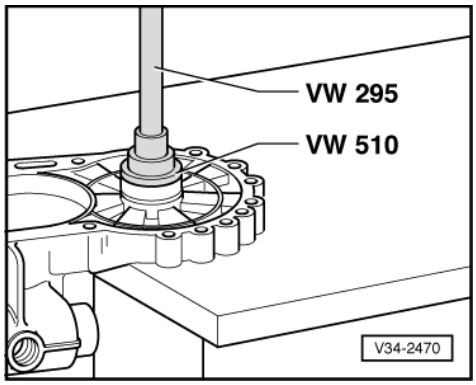

Protected by copyright. Copying for private or commercial purposes, in part or in whole, is not permitted unless authorised by Volkswagen AG. Volkswagen AG does not guarantee or accept any liability with respect to the correctness of information in this document. Copyright by Volkswagen AG.
satelettronica

-> Fig.6 Driving taper roller bearing outer race into gearbox housing

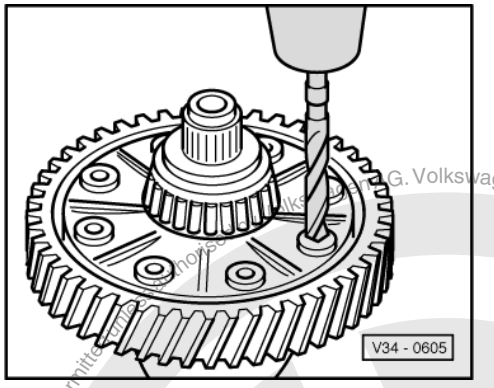

-> Fig.7 Drilling out rivet heads

- Drill out rivet heads with 12 mm drill from countersunk side and drive rivet out with drift.

Note:

Clean differential before and after drilling, protect taper roller bearing from drillings.

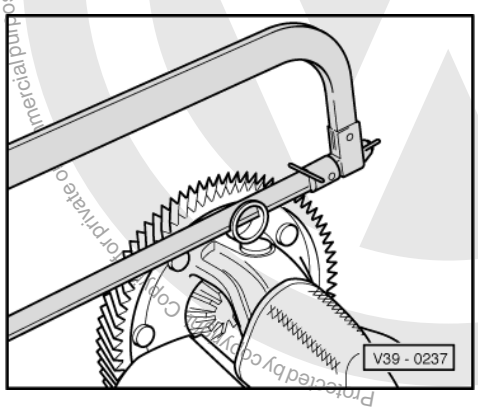

-> Fig.8 Sawing off cup head rivet/removing differential bevel gears

- Saw off cup rivet head evenly, drive out shaft and swing out differential bevel gears.

Note:

Clean differential before and after sawing, protect taper roller bearing from swarf.

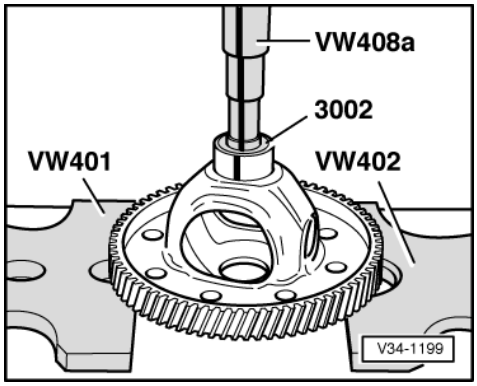

Protected by copyright. Copyright by Volkswagen AG. Volkswagen AG does not guarantee or accept any liability with respect to the correctness of information in this document. Copyright by Volkswagen AG. Copy for private or commercial purposes, in part or in whole, is not permitted unless authorised by Volkswagen AG.
satelettronica

-> Fig.9 Pressing off final drive gear

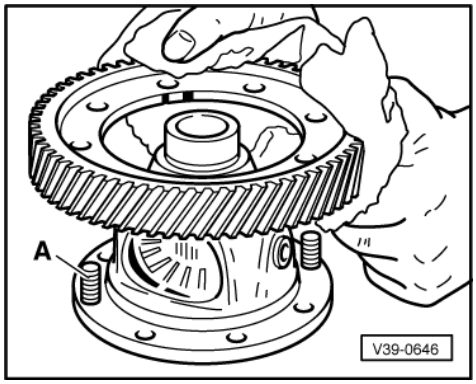

-> Fig.10 Heating final drive gear wheel to approx. 100 °C and installing

- Use bolts -A- from repair kit to guide final drive gear into position during installation.

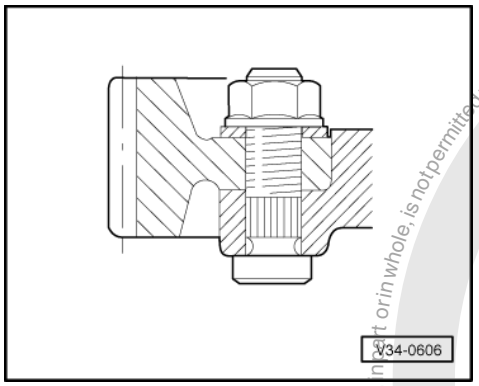

-> Fig.11 Bolting final drive gear and differential housing together

Use special bolts with plates and nuts according to parts microfiche.

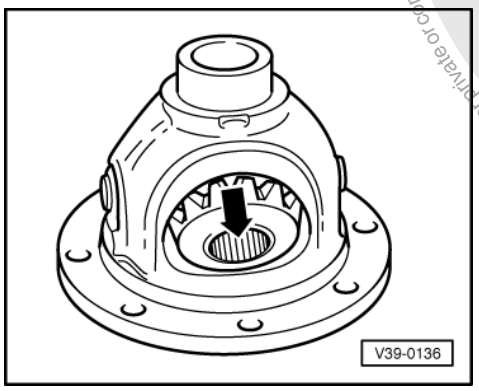

-> Fig.12 Installing differential bevel wheels

- Insert one piece thrust washer with gear oil
- Insert planet gears, drive in shaft and secure with new securing rings.

Protected by copyright. Copying for private or commercial purposes, in part or in whole, is not permitted unless authorised by Volkswagen AG. Volkswagen AG does not guarantee or accept any liability with respect to the correctness of information in this document. Copyright by Volkswagen AG.
satelettronica

Note:

If the shaft does not have any grooves for the circlips, install new shaft. Only shafts with grooves are supplied as replacement parts.

- Insert sun wheels turned through 180°and pivot into position (arrow).

3 - Adjusting differential

3.1 - Adjusting differential

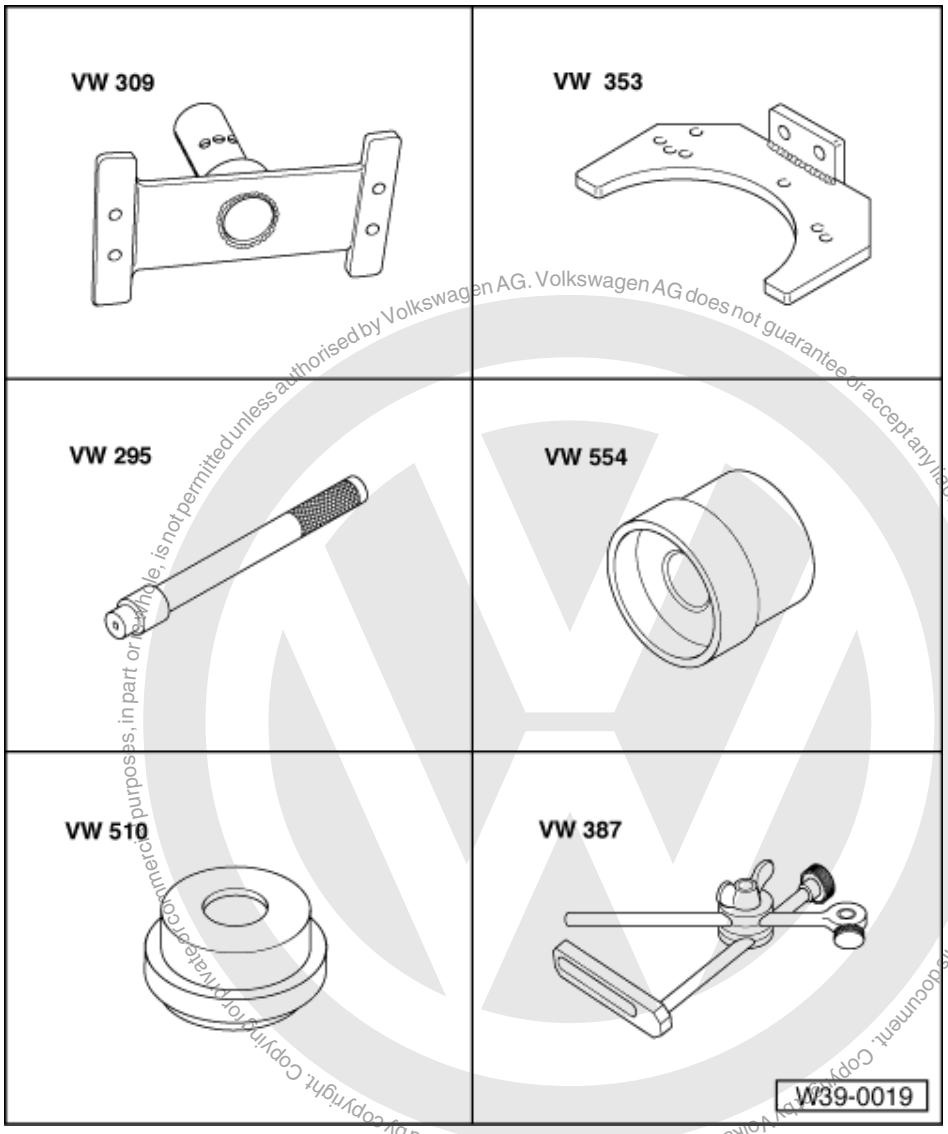

Protected by copyright. Copying for private or commercial purposes, in part or in whole, is not permitted unless authorised by Volkswagen AG. Volkswagen AG does not guarantee or accept any liability with respect to the correctness of information in this document. Copyright by Volkswagen AG.

satelettronica

Special tools and workshop equipment required

- VW 309 Holding plate
- VW 353 Gearbox support
- VW 295 Drift
- VW 554 Press piece
- VW 510 Press disk
- VW 387 Universal dial gauge bracket

Special tools and workshop equipment required

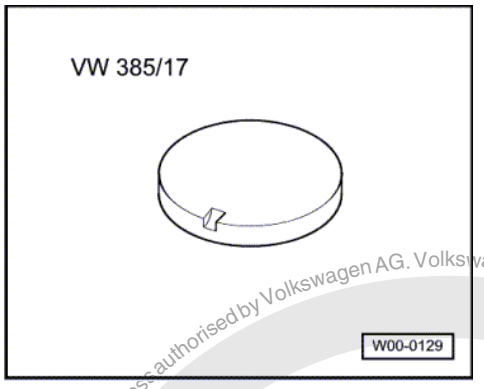

- VW 385/17 Measuring plate
- Dial gauge

The differential must be adjusted, when

- Gearbox housing
- Clutch housing
- Differential housing

or the

- Differential taper roller bearing

have been renewed.

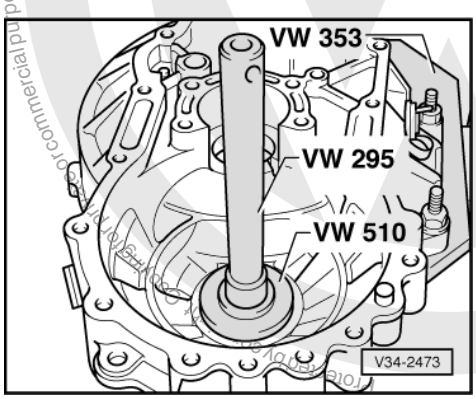

Adjustment overview => Page 193 .

- -> Drive in taper roller bearing outer race with shim S2 (always 1 mm thick) into clutch housing.

Note:

Taper roller bearing inner and outer races are paired. Do not interchange!

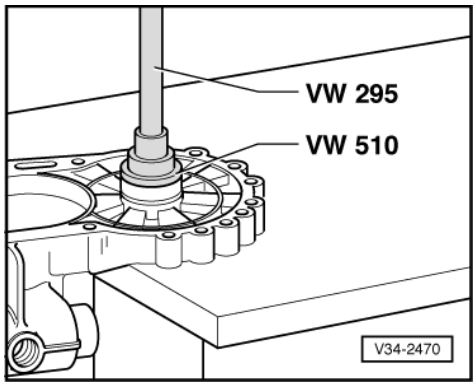

satelettronica

- -> Press taper roller bearing outer race without shim into gearbox housing.
- Fit differential into clutch housing
- Fit gearbox housing and tighten 5 bolts to torque setting.

Note:

Gearboxes with paper gasket, fit gasket first.

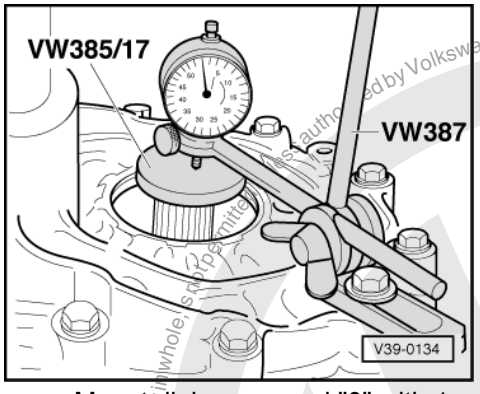

- -> Mount dial gauge and "0" with 1 mm preload.
- Move differential up and down, read off and note play indicated on D.T.I.
  (Example: 0.90 mm)

Note:

Do not turn differential when measuring, otherwise the bearing will settle and a false measurement will be given.

Determining shim S1 thickness

The specified bearing preload is obtained by adding a constant figure (0.40 mm) to the reading obtained for S1 (example: 0.90 mm).

Example:

Reading	0.90 mm

+ Preload (constant figure)	0.40 mm
Thickness of shim S1 =	1.30 mm

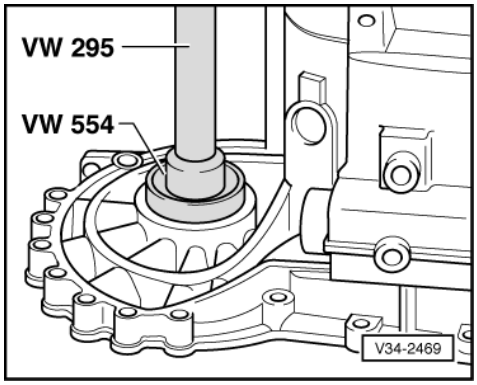

- -> Remove gearbox housing and pull taper roller bearing outer race out from gearbox housing.
- Insert determined S1 shim(s), thickest shim first.

The following shims are available:

Protected by copyright. Copying for private or commercial purposes, in whole or in part, is not permitted unless authorised by Volkswagen AG. Volkswagen AG does not guarantee or accept any liability with respect to the correctness of information in this document. Copyright by Volkswagen AG.
satelettronica

Size (mm)	Part No.
0.15	020 409 231
0.30	020 409 231 A
0.60	020 409 231 D
0.70	02K 409 210 A
0.75	02K 409 210 B
0.80	02K 409 210 C
0.85	02K 409 210 D
0.90	02K 409 210 E
0.95	02K 409 210 F
1.00	02K 409 210 G
1.05	02K 409 210 H
1.10	02K 409 210 J
1.15	02K 409 210 K
1.20	02K 409 210 L
1.25	02K 409 210 M

Varying tolerances make it possible by measuring the shims to obtain the exact shim thickness required.

If the size of shim required is larger than those listed in the table, insert two shims totalling the correct figure.

- Drive in outer race again, fit gearbox housing with gasket and tighten.

4 - Adjustment overview

4.1 - Adjustment overview

Note:

If repairs have been carried out to the gearbox it is only necessary to adjust the, output shaft or differential if components have been renewed which have a direct effect on the adjustment of the gearbox. Refer to the following table to avoid unnecessary adjustment:

		to be adjusted:	
		Output shaft => Page 170	Differential (S1 and S2) => Page 190
Part replaced:	Gearbox housing		x
	Clutch housing	x	x
	Taper roller bearings for differential		x
	Output shaft (drive pinion)	x	
	Differential housing		x
	Taper roller bearings for output shaft	x	

Protected by copyright. Copying for private or commercial purposes, in part or in whole, is not permitted unless authorised by Volkswagen AG. Volkswagen AG does not guarantee or accept any liability with respect to the correctness of information in this document. Copyright by Volkswagen AG.
satelettronica